From: Andy Shadrack [ashadra@telus.net]
Sent: Friday, February 8, 2013 9:13 PM
To: Commission Secretary BCUC:EX
Cc: 'alex.atamanenko.c1@parl.gc.ca'; 'alex.atamanenko@parl.gc.ca'; bchydroregulatorygroup@bchydro.com'; 'bcjoey68@gmail.com'; 'bharper@econalysis.ca'; 'bmerwin@mercerint.com'; 'curtis@thermoguy.com'; 'cweafer@owenbird.com'; 'david@legalmind.ca'; 'Dennis.Swanson@fortisBC.com'; 'ekung@bcpiac.com'; 'electricity.regulatory.affairs@fortisbc.com'; 'fredweislaw@gmail.com'; 'guyleroux2 @gmail.com'; 'jerryjgf@shaw.ca'; 'kemiles@telus.net'; 'lerouxconsulting@shaw.ca'; 'ngabana@gmail.com'; 'rhhobbs@shaw.ca'; 'shonnahayes@shaw.ca'; 'support@bcpiac.com'; 'tbraithwaite@bcpiac.com'; 'thackney@shaw.ca'; 'wjandrews@shaw.ca'; wjandrews@shaw.ca; 'zerowaste@shaw.ca'; 'gfulton@boughton.ca'; Bob Watters; Robert Mclennan
Subject: FortisBC Inc Advance Metering Infrastructre CPCN: IR#3

Friday, February 8

Attention Erica Hamilton, Commission Secretary

RE: FortisBC Inc Advance Metering Infrastructre CPCN

Subject: IR#3

Deployment Costs Compared

1. FortisBC has stated:

Idaho Power.Mr. Shadrack indicates that Idaho Power deployed 500,000 PLC AMI meters at $142 per meter. Pike Research (12) *states that the deployment was a PLC system serving 475,000 electric customers. The project cost was $94 million, or $197 per meter (13)* (B23-3, last paragraph page 3) .

Courtenay Waites, in Direct Testimony filed with the Idaho Public Utilities Commission, reports that estimated costs for the total deployment of PLC-AMI was $70,864,902 over three years (C13-17-1/3-Idaho Power Company-Direct Testimony, **Exh. 4** - C.Waites).

Mark Heintzelman in an email response, on January 23rd, 2013, confirmed that 485,000 PLC-AMI meters were deployed over a three year period, noting that a *total cost for meters, labor, backhaul and IT was about $74 M* (C-13-18).

This confirmed Mark Heintzelman's earlier statement:

The overall cost of the system including software and data management systems divided by meter endpoints is approximately $152 (C13-9, Appendix 1, question 6).

FortisBC's estimated costs and comparison for deployment of its smart meters in BC are:

Fortis BC: 115,000 meters, $47,700,000 = $414.78
British Columbia BC Hydro: 1,800,000 $1,000,000,000 = $555.56
FortisBC/Itron: wired 115,000 meters, $66,000,000 = $573.91 (C13-10)

With the Idaho Power Company Ltd capital deployment PLC-AMI costs at $152 per meter, how can FortisBC'**s** deployment of AMI RF Mesh at $414.78 be in the best interests of its customers?

2. Can FortisBC please justify the $30,220,000 increased cost of its proposed RF AMI system over the PLC-AMI system deployed by Idaho Power Company?

Technological Capability Compared

3. FortisBC has suggested that PLC-AMI is not well suited to North American utilities:

AMI solutions of this type have not been as popular in North American markets for several reasons, including infrastructure costs, high latency, bandwidth constraints, and problems with line noise.

...Utilities have been using phone lines and fibre optic protocols for many years. Generally speaking, however, these are not well suited for the requirements of field-area networks, which require low cost solutions with sufficient bandwidth.

...Power line communications (PLC) NAN technologies, which are limited to operation on the LV (low voltage) part of the electrical network, tend to predominate in the European system since many more meters can be supported per PLC AMI concentrator than in the North American system. Additionally, the concentrators are typically co-located with the transformer station, allowing various monitoring and automation functions to share the AMI backhaul communications. There is typically one AMI backhaul node per 100 to 200 smart meters.

With the lower ratio of meters per MV/LV transformer (~4.5 to 1) in the North American system, PLC NAN technologies are not as cost-effective. Hence, various RF technologies dominate for NAN communications. The number of meters per AMI backhaul node can vary considerably, but averages between 1,000 and 3,000 meters per concentrator. Additionally, the North American system requires much more extensive and distributed MV lines with greater risk of disruptions. This drives greater use of DA equipment for fault location, isolation, and service restoration (FLISR) throughout the MV network. Such equipment increasingly requires communications at each node (B-23, Attachment 1, AMI Communications Technologies, page 2).

Are FortisBC'**s** technical reasons for not deploying PLC-AMI summed up in its original application as follows:

...designates limited functionality available from solution

Hourly meter readings for All Customers
Home Area Network
Load Control
Conservation Voltage Reduction
Distribution Automation Device Support
Supports Provincial Energy Objectives (B-1, 7.00 Alternatives, Table 7.5.d, page 123, line 3, July 26, 2012)

4. If so, are there other functional limitations of PLC-AMI that FortisBC believes preclude it from deploying PLC-AMI?

5. Can FortisBC please state how deployment of PLC-AMI would contravene or fail to support provincial energy objectives?

6. Would FortisBC please list and describe the enhanced capabilities requiring more expensive PLC infrastructure to which it referred in B-6 BCUC IR#1 106.3 (page 247, lines 17 to 19)?

i. Is Fortis BC, for example, implying that no PLC-AMI/Non-RF system has the capability to meet FortisBC's needs?

ii. Is FortisBC, for example, implying that Itron's PLC-AMI meter, when available, would have the capability but would automatically be more expensive?

7. In Direct Testimony, Ms Waites is specifically asked:

..Q. What are the O&M benefits associated with the Project?

A. The Company expects quantifiable O&M benefits from the following areas: reduction in labor and transportation costs related to meter reading, regional operations benefit in confirming equipment outage to prevent crew dispatch, regional operations benefits in confirming service restored to prevent prolonged crew time in area, regional operations benefit on detecting overloaded distribution transformers, benefit with regards to the operation of the irrigation peak rewards program, and outage management operation benefits. The O&M benefits identified for the three-year deployment period are shown on Exhibit No.4 (C13-17-1/3-Idaho Power Company-Direct Testimony-C.Waites page 9, line 17 to page 10, line 6).

In light of FortisBC's submission of January 22nd, 2013, as cited in 3 above, can FortisBC please elaborate on how the benefits so described by Ms Waites differ from the benefits described by FortisBC in its own proposed AMI deployment proposal, and will FortisBC be introducing an irrigation peak rewards program for their irrigation ratepayers within the FortisBC service area?

8. In Direct Testimony Mark Heinztelman answered the following question:

...Q. Could you please describe how Idaho Power selected the TWACS power line carrier technology from Aclara Power-Line Systems Inc. ("Aclara") for the system wide deployment of AMI technology?

A. The Company's experience with the TWACS system goes back to 1998, when it deployed a pilot program consisting of 1,000 meters in the Idaho City area. The purpose of this program was to evaluate the system's ability to read meters in remote locations and determine the feasibility of deploying what was then Automated Meter Reading ("AMR") to reduce operating costs by automating the monthly meter reading process in low customer density areas. In 2004, Idaho Power deployed the TWACS technology in the Emmett and McCall areas in conjunction with the Phase One Implementation Plan filed with the Commission in Case No. IPC-E-02-12. The Company also utilized this technology in its Energy Watch and Time-of-Day pilot programs for the Emmett Valley. With these programs the Company was able to evaluate the system's ability to gather hourly energy use data from all endpoints in support of dynamic time-of-use ("TOU") rate applications and evaluate the system's functionality related to direct load control through an air conditioner cycling program (C13-17-1/2-Idaho Power Company-Direct Testimony-D.Heinztelman, page 2, line 21 to page 3, line 20).

Mr Heinztelman's testimony later continues:

Aclara's proposed solution demonstrated superior system performance at scale, the functional capability to retrieve hourly data at scale, and the proven ability to deliver successful system performance economically in low customer density applications (Ibid, Heinztelman, page 5, lines 6 to 11).

Could FortisBC please describe how long it has had a working relationship with Itron and what field tested pilot programs it has undertaken with Itron to test the equipment it is proposing to deploy?

9. Could FortisBC please state whether or not PLC-AMI systems have the capability to gather hourly energy-

use data and comparable load control capability?

10. Can FortisBC please confirm whether its evidence regarding the capabilities of PLC-AMI contained in its application is current, accurate and up-to-date?

11.. Mr Heintzelman's testimony continues:

...Q. Does the proposed deployment cover the Company's entire service territory?

A. Yes. The deployment covers the entire service territory, and reaches approximately 99 percent of the Company's customers. There are approximately 4,000 customers, who make up approximately 1 percent of total customers, whose electrical service comes from Idaho Power's 53 smallest distribution substations. These customers are typically in the most remote edges of our service territory and are largely low or seasonal energy users. The TWACS technology will work in these locations but the station infrastructure cost per customer is very high and is not offset by the benefits that would be achieved through AMI at this time (Ibid, Heinztelman, page 7, line 13 to page 8, line 2).

Can FortisBC please explain how its deployment assessment differs from that of Idaho Power Ltd, in terms of number of customers covered by its proposed AMI meter deployment, and how FortisBC's cost benefit analysis differs from that of Idaho Power Ltd, as per B-15, RDCK IR2 #10 page 6, lines 9 to 15?

12. FortisBC has stated:

Lower meter density negatively impacts the economics of an RF mesh solution relative to a PLC solution since RF mesh technologies rely on meter-to-meter communication (B6, BCUC IR1 #113.1.2, page 277, lines 32 and 33).

Please describe in detail the negative economic causes and effects of lower meter density.

13. Mr Heintzelman's testimony continues:

...Q. Could you generally describe the AMI system being implemented by Idaho Power and how it works?

A. The TWACS AMI system uses the electrical distribution system as the path for two-way communications between the TWACS substation communications equipment and the endpoint communications modules installed internally in the customers' electric meters or load control devices. The software for the AMI System is hosted on the Idaho Power network. It consists of proprietary software applications, a hardware operating system, backup and test applications, communications applications and servers, and database applications and servers. ***The software application will be connected to the substation control equipment through our existing internal network or through the phone system****. The substation control equipment will be installed in our existing distribution substations.* ***A typical installation would consist of a phone line with frame relay service, a phone protection package, a control receiver unit to provide the connection between software system and*** *the station equipment and to control the operation of the station equipment, an outbound modulation unit to convert the data request to be transmitted across the electrical distribution system, a modulation transformer unit to inject the signal on the distribution system, and inbound pickup units to retrieve the data back from the endpoint communications modules.*

The only equipment required on the electrical distribution system are the endpoint communications modules. The communications are modulated on the electricity flowing on the system and, therefore, no additional equipment is required between the substation and endpoints. Because of the unique method used by the TWACS system to modulate the electrical sine wave the signal requires no further modulation amplification and

remains intact to the end of the electrical distribution system...As we add new customers, the only equipment required to expand the existing communications system will be a communications module in the electric meter or end device." (Heinztelman, page 9, line 5 to page 10, line 16, and 20 to 22).

...Q. Could you give a brief description of how the AMI two-way automated communications system works?

A. Yes. Please refer to Exhibit No.3 to my testimony for a simplified diagram of how the system is connected. Once the components of the system are installed, communications take place starting with the software initiating communications commands, typically on a predetermined schedule. ***The commands are processed through a communications server and sent out through our internal network or through a phone service provider to the appropriate distribution substation.*** *At the substation, the communications command is received by the TWACS station equipment and sent out on the electrical distribution system. Each endpoint communications module (located in the meter) is uniquely identifiable and responds to requests for data only when specifically addressed by the system. When a communications module is addressed by the system, it will respond to the request by delivering the data requested in a predetermined format. There are typically data retrieval schedules for daily meter reads, predetermined blocks of hourly energy use data, and monthly billing reads. Once the substation control equipment has the information back from the individual communications modules,* ***the data will automatically be sent back over the phone or network system to the TWACS network software****. The data is then validated and moved to the system database. The TWACS system has built in features to continually optimize the communications process, and in cases where you are retrieving hourly energy use information, it is best not to interfere with the systems automatic operations by making frequent direct unscheduled data requests from individual communications modules. Direct unscheduled communications will be limited to troubleshooting and necessary maintenance communications. This will allow the system to optimize communications and data retrieval performance* (Ibid, Heintzelman, page 10, line 23 to page 12, line 10).

In contrast FortisBC has stated:

...FortisBC is not aware of specific non-PLC, non-RF AMI implementations, so has not monitored the progress and results from any implementations.

...FortisBC is not aware of any broadly-deployed AMI solution that uses third-party telephone lines for the LAN, so has not evaluated the cost.

...FortisBC used the term "broadly-deployed" to differentiate the implementation of a telephone-based AMI system from downloading consumption data from a small number of large-power customer meters using telephone or cellular lines.

FortisBC is not aware of any utilities that have implemented AMI using third party telephone lines as an alternative to an RF mesh LAN solution, so has not evaluated the cost.

..The Company respectfully submits that it did answer the question. FortisBC is unaware of any third-party telephone line based AMI systems or implementations, so there is no point in evaluating any theoretical barriers (B-15 CSTC IR2# 12, 13 and 14, page 9, lines 24 and 25, page10, lines 2 and 3, 9 to 13, and 26 to 28).

Yet on January 22nd, 2013 FortisBC, in its submission, uses a quote from a report that states:

Utilities have been using phone lines and fibre optic protocols for many years. Generally speaking, however, these are not well suited for the requirements of field-area networks, which require low cost solutions with sufficient bandwidth (B-23, page 2).

Further, in Appendix 1 at question 11, Mark Heintzelman states:

Our largest substation serves just over 16,000 customers and we have not seen any issues related to data retrieval (C13-9, Appendix 1).

Is FortisBC responding with regard use of telephone lines for collection of data from the meter or endpoint to the substation, or is FortisBC including backhaul use of telephone lines and/or fibre optic from the substation back to the data collection center where billing is undertaken?

14. Please describe in detail why telephone line and fibre optic use are not suitable for backhaul of data from a substation to a data centre where billing is undertaken?

15. In contrast FortisBC stated in its original application at Power Line Carrier Systems:

Since the collectors are housed in the substations, the cost of the PLC option is, in part, dependent upon the number of endpoints served per substation. The cost of the infrastructure within the substation is the same no matter how many customers are downstream of that particular substation. However, the distance between the metering endpoint and the substation determines how many line devices need to be installed upon the distribution lines to ensure that the data can travel the required distance (B-1, Power Line Carrier Systems, 7.3, page 112, line 1 to 7).

Do all PLC-AMI systems require power line devices installed on the distribution lines to ensure that the data can travel the required distance, or are there some PLC-AMI systems that can operate without those devices?

16. In Appendix 1 at question 11 Mark Heintzelman states:

Our largest substation serves just over 16,000 customers and we have not seen any issues related to data retrieval. (C13-9, Appendix 1, Question 11)

In earlier testimony he also sates:

The substation control equipment will be installed in our existing distribution substations. A typical installation would consist of a phone line with frame relay service, a phone protection package, a control receiver unit to provide the connection between software system and the station equipment and to control the operation of the station equipment, an outbound modulation unit to convert the data request to be transmitted across the electrical distribution system, a ***modulation transformer unit to inject the signal on the distribution system****, and inbound pickup units to retrieve the data back from the endpoint communications modules* (Ibid, Heinztelman, page 9 line 20 to page 10 line 7).

In contrast FortisBC states in response to BCUC IR2 #35.3 that:

The largest driver of the increased cost per customer of the PLC system is the lower customer/PLC injection point ratio at FortisBC (which average 2,100 customers per PLC injector) versus FortisAlberta (which averages 2,900 customers per PLC injector). A PLC injector is needed at each substation, with additional injectors required for split busses or when there are multiple distribution voltages at a substation (B-14, BCUC IR2 #35.3, page 76, lines 3 to 7).

What is the source for FortisBC's response and is more than one injector always required for PLC-AMI systems or are there PLC-AMI systems that do not require more than one injector?

17. As cited above, Idaho Power Company testified that:

The only equipment required on the electrical distribution system are the endpoint communications modules. The communications are modulated on the electricity flowing on the system and, therefore, no additional equipment is required between the substation and endpoints. Because of the unique method used by the TWACS system to modulate the electrical sine wave the signal requires no further modulation amplification and remains intact to the end of the electrical distribution system...As we add new customers, the only equipment required to expand the existing communications system will be a communications module in the electric meter or end device (Ibid, Heinztelman, page 10, lines 8 to 16, and 20 to 22).

In contrast FortisBC responded to CEC IR1 #44.2 as follows:

Compared with other utilities, FortisBC has a significant proportion of long rural distribution feeders and a lower number of customers per feeder. This was expected to have an impact on which technologies might be proposed by respondents to the RFP. For example, some technologies such as PLC require equipment to be installed on each feeder and require additional infrastructure to propagate the communications signal along a long feeder. For FortisBC, the costs to deploy this technology would likely not be as economical as it would be for other utilities (B-11, CEC IR1 #44.2, page 62, lines 9 to 15).

Please confirm that all PLC-AMI systems require equipment to be installed on each feeder and additional infrastructure to propagate signals, or are there PLC-AMI systems that do not require equipment to be installed on feeder lines?

18. In response to BCUC IR2 #31 FortisBC states:

FortisBC did not indicate that PLC meters would be generally unsuitable for high-density customer service areas. The Company simply pointed out the relative economics of RF mesh and PLC solutions with respect customer density (B-14, BCUC IR2 #31, page 64, lines 18 to 20).

At **Power Line Carrier Systems**, FortisBC stated:

Depending on the number of endpoints and the frequency of reading intervals, the amount of data travelling between the meters and the collectors can overwhelm the bandwidth of a PLC system. This becomes increasingly challenging once load control or pricing signal data is included for transmission through these same communication channels. The volume of data can impact the speed of transmission and can cause delays in getting the information back to the central computer in a timely fashion (B1, 7.3, page 112, lines 8 to 13) .

Please provide the source for your information on the possibility and consequences of potential bandwidth overwhelm with PLC-AMI systems and state whether FortisBC believes this is the case for all types of currently marketed PLC-AMI systems.

19. at BCUC IR2 #31.2 FortisBC states:

Please note that the customer density figures provided in the response to BCUC IR No.1 Q113.1.2 were based on incorrect data from the Canadian Electricity Association. That data has since been corrected. The correct values are 2.3 meters per square kilometre for FortisAlberta and 6.4 meters per square kilometer for FortisBC. These corrected figures do not affect the original response (B-14, BCUC IR2 #31.2, page 65, lines 6 to 10)

Please describe the significance and compare the consequences of a customer density of *11.2 meters per square kilometre* (FortisAlberta) *vs FortisBC density of 38.6 meters per square kilometre,* and why a change to 2.3 meters and 6.4 meters per square kilometer does not affect FortisBC's original hypothesis?

20. At C13-9 confirmation is requested as to the meter density for Idaho Power Ltd:

Can Idaho Power confirm that they currently serve 495,570 customers across 24,000 square miles (62,160 square kilometers) at an average density of 20.65 meters per square mile (7.97 meters per square kilometer)? We currently have just over 500,000 with 522,000 meters installed over 24,000 sqmi (C13-9, Appendix 1, Question 10, December 7, 2012).

FortisBC stated:

*FortisBC cannot definitively say why Idaho Power chose a PLC system. However, several factors may have contributed when Idaho power filed its regulatory application in 2008 for a PLC-based AMI system: 1) PLC technology was more cost competitive at lower meter densities per square kilometer when the system was selected,...(*B-11, R#1, 2, page 1 lines 24 to 27).

If FortisAlberta has deployed PLC-AMI meters at 2.3 per square kilometre and Idaho Power Ltd has deployed them at a density of approximately 8.4 meters per square kilometre, at the 6.4 meters per square kilometer density upon which FortisBC has based its current application, does meter density remain a limiting issue for RF Mesh AMI or PLC-AMI alternatives, and, if so why?

21. In Order 30726, the Idaho Public Utilities Commission observes that:

Staff emphasized the importance of providing "real time" usage information to customers. Accordingly, Staff recommended that the Company inform customers of the availability of power cost monitors such as the Blue Line, Aztech and Energy Detective devices. Id. at 15-16. These commercially available devices enable customers to acquire "information on energy usage and the associated cost on a real time basis Id (C13-17-1, Idaho Power Company-CPCN Application AMI Installation, Order 30726, paragraph 2, page 7).

The Commission further stated:

We find that deployment of AMI technology will also offer substantial future benefits by providing an essential platform for remote connect-disconnect capabilities (Ibid, Order 30726, page 8, second paragraph).

Mark Heintzelman also acknowledges that the deployed PLC-AMI could add remote disconnect/reconnect functionality (C13-9, Appendix 1, response question 3, December 7, 2012).

FortisBC has stated, however, in response to Keith Miles in IR#1 that:

*2) Idaho Power did not require HAN functionality, 3) Idaho Power did not require remote disconnect/reconnect functionality (*B-11, R#1, 2, page 1 lines 27 and 28).

Is it true that retrieval of real time energy usage information and remote disconnect/reconnect functionality are obtainable with PLC-AMI deployment and if not, please explain why?

22. Mark Hentzelman's email of January 23rd, 2013 to Area D states Itron was one of three RFP deployment bids of smart meters in Idaho Power Company's service area in 2008 (C13-18).

Was this bid for deployment of AMI-PLC or RF-AMI?

Deployment on Non-RF Meters Compared

23. On behalf of Area D I submit information provided by Bill Weber, Director, Account Management, Aclara Technologies LLC to a request by RDCK Area D for comments on FortisBC's submission of January 22nd, 2013 in which it stated:

...The remaining electric AMI deployments using non-RF communications technologies consist of one small (7,100 meters) deployment using fibre-optic communications technology, two deployments using broadband over power line carrier (BPL) networks, and 13 PLC networks (including FortisAlberta).

...In Canada, 2.9 million AMI meters have been installed, with a further 7.2 million installations planned, for a total of 10.1 million. Of these, only FortisAlberta's 480,000 AMI meters (or 4.7% of the total installed/planned AMI meters in Canada) are PLC. There are no planned installations in Canada using PLC AMI.

In the United States, 38.3 million AMI meters have been installed, with a further 18.2 million installations planned, for a total of 56.5 million. Of the total planned/installed, only 3.6 million (or 6.4%) are PLC (B-23, Attachment 1, page 1).

In contrast Bill Weber of Aclara Technologies reports:

We have 361 TWACS customers with 13M [13 million] *TWACS devices. Twelve of these customers are outside of the US and Canada and are located in Mexico, South America, Asia and the Caribbean* (see Appendix 1 below).

Can FortisBC please explain the basis of its claim that only 16 non RF deployments have occurred in the US and Canada, when Aclara reports that they have deployed their non-RF AMI meter with 113 utilities between 2008 and 2012 alone (see Appendix 1 below)?

24. Given that Aclara is one of the top 10 smart grid vendors in North America, did FortisBC consider a TWACS system for deployment in its service area?

25. Did FortisBC consider the possibility of a TWACS system in the design of its RFP proposal?

26. How many of the top 10 smart grid vendors did FortisBC send out its RFP to?

27. What is the meter reading performance rate of the proposed Itron RF system?

28. From what source did FortisBC get the information that gas and water meter read data was not being transmitted along power lines?

Respectfully submitted,
Andy Shadrack
Director Area D
Regional District Central Kootenay

Appendix 1

From: "Weber, Bill" <BWeber@aclara.com>
To: 'Andy Shadrack' <ashadra@telus.net>
Subject: RE: TWACs PLC-AMI
Date: Thu, 7 Feb 2013 19:54:23 +0000

Andy,

I enjoyed talking with you this morning. My contact information is available at the end of this e-mail. Please feel free to contact me at any time.

As we discussed, Aclara offers two AMI technologies, TWACS which is our power line communication system primarily for electric and STAR Radio based system which is primarily used for water and gas AMI. We have successfully deployed the STAR gas solution to 4+ million gas meters at Pacific Gas and Electric and are currently engaged in another 4+ million gas meter deployment at Southern California Gas. The rest of this e-mail will focus on the TWACS electric meter power line solution.

As I mentioned on the phone it is important to differentiate TWACS from power line carrier systems. Two power line carrier systems that I am aware of are Hunt's Turtle system and Cannon by Cooper Power Systems. TWACS works by modulating the power at the zero cross, not by injecting a carrier onto the power line. The reason the TWACS system works and the carrier systems have problems is because the power delivery distribution networks are constructed to deliver power at 60 Hz., not to deliver a signal injected at a higher frequency. That is the strength of TWACS! It communicates at 60 Hz and the TWACS signal will go everywhere the distribution power lines go. Distance is no problem. We communicate very reliably on feeders in excess of 100 miles long.

ATCO Electric in Edmonton has the TWACS system deployed and has been using that system to read over 200.000 electric meters and 30,000 water meters at a 99% success rate since 1999. That system was deployed purely for AMR(Monthly billing meter reads). They are running smart grid tests for the DOE, but have not moved forward with AMI at this time.

I suggest you visit the following links on our public website:

http://www.aclaratech.com/Pages/default.aspx

http://www.aclaratech.com/AclaraPLS/Pages/twacsadvantages.aspx

Strengths of the TWACS network are:

1) Surety of cost. The network equipment is installed in the substation and it communicates reliably everywhere the distribution circuits go

2) Performance: We have customers with as many as 1.4 M [1.4 million] meters that have read these meters successfully for the past 3 years at the following performance rates:

a. Daily Consumption Reads – 99.72%
b. Hourly Interval Data – 99.65%
c. Billing Reads – 99.87%

3) Most of our customer have the original TWACS networks deployed. We recently introduced an enhancement to TWACS that we call eTWACS or TWACS 20. The original TWACS network would read meters serially on one phase of one feeder of a bus at a time. Today's eTWACS system is able to read meters on every phase, feeder and bus in parallel instead of serially. With eTWACS most utilities can read hourly interval data and daily/billing reads in under 4 hours and have the TWACS network available for Demand Response, Distribution Automation, Outage Management Support, Customer Service real time power and read checks, voltage checks, prepay, connect/disconnect, etc.

4) The key to TWACS is that we can read any single meter in under 15 seconds and we can get basic AMI data(hourly and daily reads) from all the meters in just a few hours. The competitors look at the TWACS fundamental signal below and say its slow because it runs at the 60 Hz. The facts are that because every feeder and phase is a parallel communication node that supports 6 channels of data that the system is power, fast and reliable.

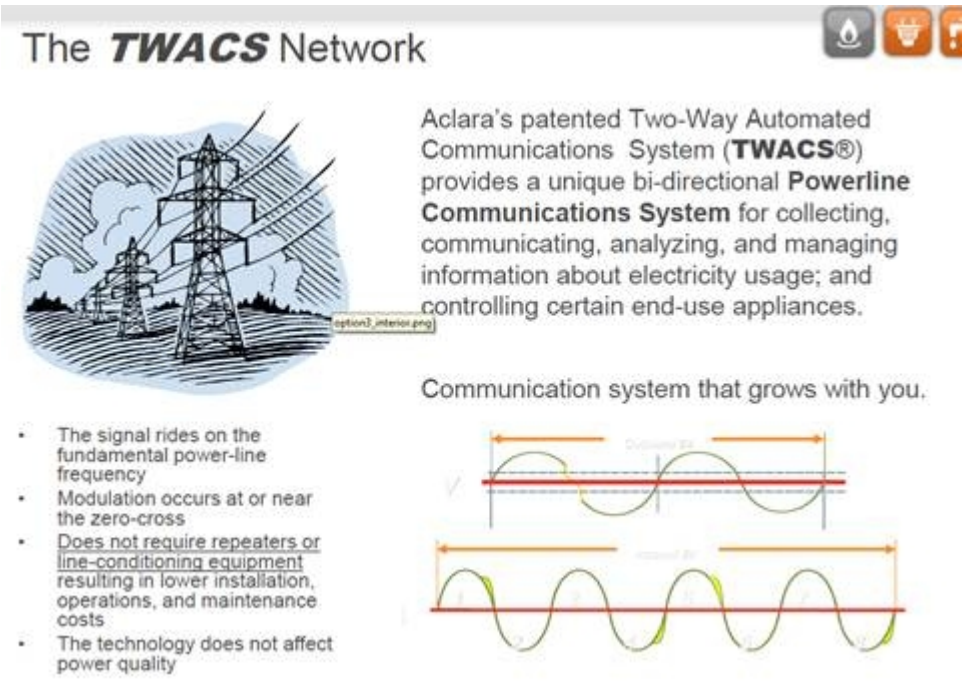

1. Could you please provide me with a list of the electric power utilities in North America where a TWACS (Power Line Data Capture) PLC-AMI system has been deployed and if possible the year in which it was deployed?

I am not at liberty to give out names of our customers, but will answer your questions the best I can. We have 361 TWACS customers with 13M TWACS devices. Twelve of these customers are outside of the US and Canada and are located in Mexico, South America, Asia and the Caribbean. Another 12 TWACS customers are IOUs in the US and Canada. The remaining customers are Electric Cooperatives and Municipals in the US. Of the customers in the US and Canada, one was installed starting in 1986 involving a significant development period. And the rest were deployed as follows:

1999 6
2000 7
2001 12
2002 17
2003 44
2004 51
2005 29
2006 39
2007 28
2008 21
2009 19
2010 26
2011 34
2012 13

2012 was a rough year, primarily due to the economy and the end of smart grid funding. 2013 already looks to be a better year than 2013.

2. Are there any water or gas utilities where the TWACS technoloy is being deployed?

ATCO Electric and several of the Municipal utilities deploy electric and water and/or gas meters. Aclara partners with Badger Meter who supplies their Orion module for the gas or water meters. The Orion module transmits the water or gas meter reads back to a receiver that is located under the glass of the electric meter. Those reads are then brought back over the power line via the TWACS network. Other utilities have deployed both our TWACS and STAR networks to read the electric(TWACS) and water or gas(STAR).

3. How many other companies besides Aclara are deploying PLC-AMI smart meters in North America?

Two power line carrier systems that I am aware of are Hunt's Turtle system and Cannon by Cooper Power Systems. TWACS is not a carrier signal.

4. Are there any companies deploying fibre optic cable or broadband over power carrier line?

As far as I know Broadband over the power line has not been successful and although a few companies are trying fiber optics, it is overkill for AMI and as a result is very expensive. If it could be bundled successfully with other technologies such as phone, TV and internet it could be viable, but I am not aware of any such systems that can also do AMI.

Additional information:

<u>Network components installed at substation:</u>

Integrated Modulation Transformer Unit (MTU) Package

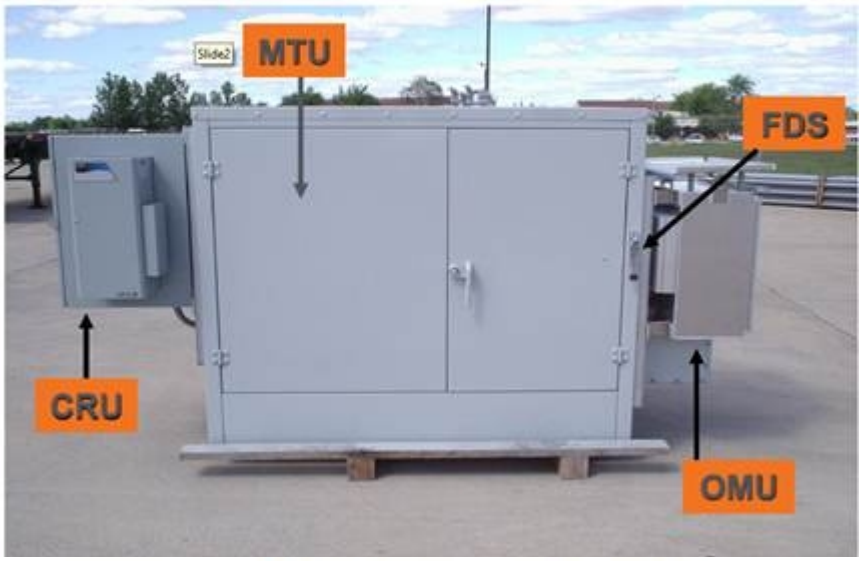

Inbound Pickup Unit (IPU) - External

How It's All Connected

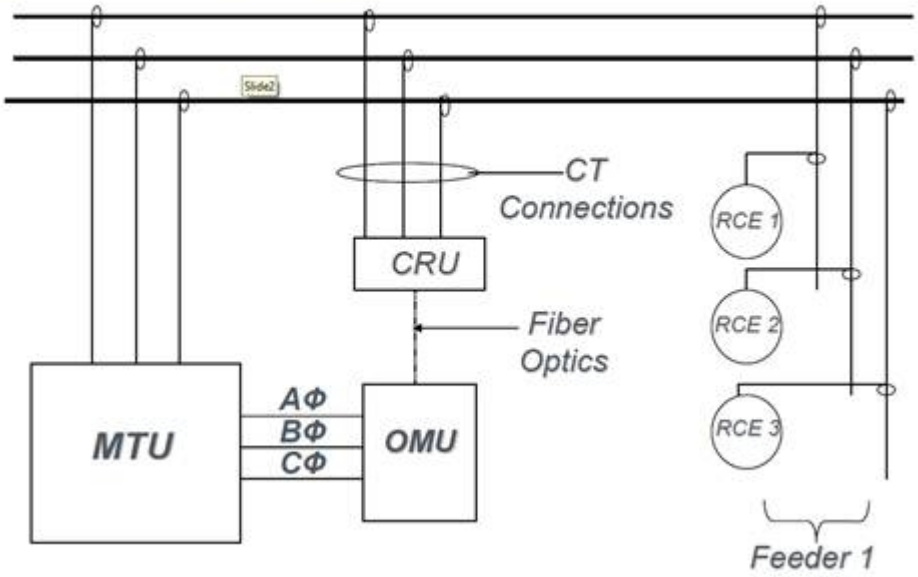

Meters – All Measurement Canada Approved with the TWACS communication module:

Remote Communications Equipment (RCE) - Residential Meters

•L+G Focus AL and AX with and without Remote Disconnect

•L+G Focus AX Extended Range Poly-phase meter

•GE i210+ with and without Remote Disconnect

•Elster A3 Poly-Phase

•GE kv2c Poly-Phase

Parent and Sister Companies

I hope this information is helpful. Feel free to contact me anytime.

TWACS is a very viable AMI communication technology for IOUs, Municipals and Cooperatives.

Bill

Bill Weber
Director, Account Management

Aclara Technologies LLC
945 Hornet Drive
Hazelwood, MO 63042

www.Aclara.com

314.895.6597 – Direct.
314.749.2150 - Cell

From: Andy Shadrack [mailto:ashadra@telus.net]
Sent: Monday, February 04, 2013 12:10 PM
To: Info; Weber, Bill
Subject: TWACs PLC-AMI

Kaslo

Monday February 4th

My name is Andy Shadrack and I am the equivalent of a County Commissioner in the Regional District Central of Kootenay in British Columbia, Canada and I am appearing as an intervenor before the British Columbia Utilities Commission. The following statement was submitted to the Commission on January 22, 2013:

...The remaining electric AMI deployments using non-RF communications technologies consist of one small (7,100 meters) deployment using fibre-optic communications technology, two deployments using broadband over power line carrier (BPL) networks, and 13 PLC networks (including FortisAlberta).

...In Canada, 2.9 million AMI meters have been installed, with a further 7.2 million installations planned, for a total of 10.1 million. Of these, only FortisAlberta?s 480,000 AMI meters (or 4.7% of the total installed/planned AMI meters in Canada) are PLC. There are no planned installations in Canada using PLC AMI.

In the United States, 38.3 million AMI meters have been installed, with a further 18.2 million installations planned, for a total of 56.5 million. Of the total planned/installed, only 3.6 million (or 6.4%) are PLC

1. Could you please provide me with a list of the electric power utilities in North America where a TWACS (Power Line Data Capture) PLC-AMI system has been deployed and if possible the year in which it was deployed?

2. Are there any water or gas utilities where the TWACS technoloy is being deployed?

3. How many other companies besides Aclara are deploying PLC-AMI smart meters in North America?

4. Are there any companies deploying fibre optic cable or broadband over power carrier line?

Thank you in advance for providing me with this information noting I have to file it with the Utilities Commission on or before approximately 4.00 PM Pacific Time Friday February 8th, 2013.

Respectfully submitted
Andy Shadrack
Director Area D
Regional District Central Kootenay