CREATIVENERGY

February 1, 2017

Via Email

Ms. Laurel Ross
Acting Commission Secretary
BC Utilities Commission
Sixth Floor, 900 Howe Street, Box 250
Vancouver, BC V6Z 2N3

Dear Ms. Ross:

Re: CE Final Argument for Approval of NEFC Connection Agreement

Attached is Creative Energy's final argument for the approval of the NEFC Connection Agreement. Updated Schedules B and C have also been included in the submission for information purposes only.

Yours truly,

(original signed)

Robert Hobbs

Acting President and CEO

CREATIVE ENERGY VANCOUVER
PLATFORMS INC.

Suite 1 – 720 Beatty Street
Vancouver, Canada
V6B 2M1

604 688 9584 TEL
604 688 2213 FAX
creativeenergycanada.com

IN THE MATTER OF THE

Utilities Commission Act, R.S.B.C. 1996, Chapter 473

AND

Creative Energy Vancouver Platforms Inc.

For Approval of a Connection Agreement

Final Submissions of Creative Energy

February 1, 2017

A. Introduction 3
B. Scope of Proceeding and Commission Decisions 4
C. Comparators for the Connection Agreement 4
D. End-Use Provisions 5
E. Building System Compatibility 9
F. The Alleged Catch-22 9
G. CEC Requested Addition to Connection Agreement 11
H. Term of Service Agreement 11
I. The Regulatory Compact, Commission Jurisdiction, and End-Use 12
J. Section 44.1 Objectives 12
K. Reasons for Denying Approval of Connection Agreement and the Five Requests 13
L. Conclusion 13

A. Introduction

1. Pursuant to Section 59-61 of the *Utilities Commission Act*, Creative Energy is seeking approval of the Connection Agreement filed as Exhibit B-1-3.
2. On January 18, 2017, the interveners - BCSEA, FEI, and CEC - filed Final Submissions in accordance with the regulatory timetable approved by the Commission. In these Reply Submissions, Creative Energy will limit its comments to material issues raised by CEC, and where further response is necessary. Silence on Creative Energy's part in response to any particular submission by CEC should not be taken as agreement by Creative Energy. Creative Energy will not comment on FEI Final Submissions, and recommends to the Commission Panel the BCSEA Final Submissions.[1]
3. Creative Energy relies on the evidence in this proceeding, including its Application and IR responses. It is submitted that the evidence demonstrates approval of the Connection Agreement will conserve the public interest.
4. Creative Energy did not request monopoly rights in previous NEFC proceedings[2] and is not requesting monopoly rights in this proceeding. It is also true that the NEFC Decisions did not, and this Decision will not, alter the CoV's authority to require developments to connect to an NES.[3] For that reason, it was very appropriate for the Commission to limit the scope of FEI information requests. In this proceeding, Creative Energy is merely requesting service requirements.
5. Contrary to the position of CEC that this proceeding is about monopoly rights, the issues in this proceeding are about whether a Stream B utility before connection to the NES should require the customer 1) to design their building systems so that it is compatible with NES service and 2) to agree to not displace loads being serviced from the NES.
6. This reply submission will first consider the scope of this proceeding, then the end-use provisions, and finally other provision specific concerns of CEC.

[1] Creative Energy has previously confirmed that it is not seeking approval of Schedule B and Schedule C to the Connection Agreement.
[2] Order G-151-16, Order G-88-16, and Order C-12-5
[3] CoV Final Submissions, para. 9

B. Scope of Proceeding and Commission Decisions

7. The Commission determined the scope of this proceeding as follows:

> The Panel considers that the information regarding agreements between the City of Vancouver and Creative Energy that FEI seeks to obtain through IR's 2.1, 2.2, 2.3, 2.3.1, 2.4 and 2.4.1 is not relevant to the issues in this proceeding and will not direct Creative Energy to provide responses to the FEI IRs, as requested in your submission.

CEC submits that the above determination is an insufficient definition of the scope of issues to be considered.[4] CEC may not accept this determination to be relevant to their submissions; nevertheless, it is a sufficient scope definition for the Commission to conclude that the issues raised by CEC are beyond the scope of this proceeding. That is, mandatory connection policies have been determined by the Commission Panel to be beyond the scope of this proceeding.

8. CEC submits that the Connection Agreement provides for monopoly rights well beyond normal practice.[5] The CEC further submits:

> The Commission has been clear in its requirements that the Connection Agreement not impose exclusivity upon customer end-use in and of itself.[6]

9. CEC also claims principles have been established by the Commission that are relevant to the Connection Agreement, and that the Connection Agreement should comply with these principles.[7] Creative Energy does not accept that the Order G-151-16 established principles relevant to this request for approval of the Connection Agreement. It is clear from the NEFC Decisions that if such principles were established then such principles are relevant to Franchise Agreements, not to Connection Agreements.

C. Comparators for the Connection Agreement

10. CEC submits that the most appropriate comparator for the instant application is Creative

[4] CEC Final Submission, para. 66
[5] CEC Final Submission, para. 6
[6] CEC Final Submission, para. 21
[7] CEC Final Submission, para. 3-7

Energy's steam service to customers.[8] Then CEC relies on a Central Heat letter dated May 29, 2013 to demonstrate that "heat service does not require exclusion of alternatives nor control of end-use."[9] In fact the letter states: "Customers are not obligated to connect to the district energy system".[10]

11. The letter does not even mention end-use restrictions, and certainly does not say that there are no end-use restrictions in steam service contracts. There is simply no foundation in the letter for the conclusions drawn by CEC about end-use restrictions in the steam service contracts. Nevertheless, now that CEC has insisted that steam service to customers be a comparator vis a vis end-use restrictions, Creative Energy agrees, and so should the Commission. For reasons only known to CEC, it concluded that steam service contracts are the most appropriate comparator. All other concerns about comparators raised by CEC should be given little or no weight, and as requested by CEC the most appropriate comparator should be the comparator identified by CEC as the most appropriate comparator.

12. CEC submits that the appropriate comparators for a public utility do not include comparators for municipal energy systems or master planned developments.[11] The Commission has distinguished its conflicting conclusions regarding Franchise Agreements and mandatory connection policies based on whether the NES is a master planned development.[12] Such a distinction has not been applied to Connection Agreements and exclusive end-use policies. Nevertheless, Creative Energy submits that developers who connect their buildings to an NES are "master planned developers" in the context of the NEFC Decisions. Therefore, the comparators Creative Energy provided in the application are appropriate.

D. End-Use Provisions

13. CEC claims that the Connection Agreement confers both exclusivity of supply and

[8] CEC Final Submissions, para. 73
[9] CEC Final Submission, para. 74
[10] Exhibit B-7 CEC 1.20.1
[11] Ibid., para. 71
[12] Order G-151-16, p. 21 of 23

exclusivity of end-use.[13] Creative Energy disagrees that the Connection Agreement confers exclusivity of supply and agrees that it includes end-use restrictions, but such restrictions are limited by the term of the contract only apply to customers that have chosen to connect to hot water service. The end use restrictions are established by contract and not a franchise agreement, which the Commission has denied. And they are between the developer and Creative Energy. The Commission has already accepted constraints imposed by developers in both Stream A and Stream B utilities.

14. In Order G-151-16, the Commission concluded as follows:

> Therefore, because it is not in the public interest to do so, this Panel will not approve a franchise agreement that includes any provision that imposes, or suggests the imposition of, any monopolistic restrictions beyond the first category in Table 1 above, except for master planned developments.[14]

15. CEC submits that there is no "master developer" in this instance.[15] It is not clear what distinction CEC is attempting to make. There is a developer of a site and Creative Energy's agreement is with that developer. For the purposes of individual sites, the developer is the developer. Period. The reference was in relation to a restriction on multiple sites imposed by a master developer. Creative Energy agrees that does not apply in this context. But Creative Energy is not seeking approval of a franchise agreement. Nor is it seeking approval of a connection agreement across multiple sites. It is seeking approval of a connection agreement with individual developers and for the purposes of those individual developments, the developer is in fact a "master developer."

16. Nevertheless, the end-use restrictions in the Connection Agreement are in category 5 of Table 1. In past Connection Agreements, the Commission has accepted end-use restrictions in the nature of category 5 of Table 1. [16]

Both The UBC NDES and Telus Garden include the following end-use restrictions:

---

[13] Ibid., para. 15

[14] Order G-151-16, Appendix A, page 22 of 23, third full para., last sentence

[15] CEC Final Submission, para. 78

[16] Exhibit B-1, Appendix 5, Energy Services Agreement, Corix, section 2.2, and Appendix 6, Telus Garden Statutory Right of Way, section 6

> No Alternate System or Service Provider. The powers and rights granted to Corix under this Agreement are exclusive to Corix and, except as expressly provided hereunder, the Developer will not itself perform, provide, install or realize, nor allow any other Person to perform, provide, install or realize any other system to provide primary domestic hot water and space heating to any Building, nor use or allow or consent to any other Person supplying or distributing Thermal Energy or Energy Services to the Developer Lands. Fireplaces located in individual residential units are not prohibited by this Section 2.2, nor are other supplemental heating system(s) in any areas of a Building where Thermal Energy is either: prohibited by applicable Laws; or is not feasible, as mutually agreed by the Parties, each acting reasonably.
>
> No Alternate System. The Grantor will not itself supply or install or allow any other person to install a District Energy System or any other system that would supply District Energy Services or domestic hot water heating and/or space heating or cooling to the buildings or any portion thereof located on the Lands. The Grantee acknowledges and agrees the foregoing prohibition shall not apply to emergency generators, fireplaces located within individual residential units on the Lands, or to small demonstration projects on the Lands for the purpose of demonstrating various technologies, such as solar hot water heating.

17. For the same reasons, Creative Energy submits that in this Connection Agreement the Commission should accept end-use restrictions. For small thermal networks, the incremental cost of new connections far exceed those for large established gas and electric grids. For that reason, it is necessary for a small NES to have some assurance of future loads in the form of exclusive end-use provisions.
18. One of the reasons for such end-use restrictions is to avoid redundant capacity. That is, once a developer has agreed to connect to a NES it would be unfair to future end-use customers to pay for the cost of redundant capacity (whether upfront or through ongoing maintenance and reserve requirements). So as to avoid this outcome end-use restrictions are imposed.
19. A second reason for end-use restrictions is to reduce the risk to the utility and other customers of stranded investments. Stranded investment risk also can be reduced by two rate design options: 1) a fixed component that recovers the full cost of connection and/or 2) a take or pay provision. Both conditions have been used in other connection agreements, whether these are governed by an agreement with some master developer (as

in the case of UBC, UniverCity, River District, or Dockside Green) or individual developers as in the context of new Stream A utilities such as Telus Garden or Marine Gateway. However, both rate design approaches to stranded investment risk do not, at least as directly, address concerns related to the redundant capacity problem.

20. It should also be noted that the end-use restrictions do not restrict many other alternatives to meet or reduce load requirements, including behavioral changes, efficiency upgrades, and active waste heat alternatives. Creative Energy has also not restricted the use of solar systems.

21. Steam service is a 50 year old service that has been built over time, with a contract that has been used for most, if not all, of that time. That contract requires customers to identify the uses for steam service and provide an estimate of the annual quantity of steam required. Then the contract provisions include the following:

> Provision of Service: the Utility agrees to give notice to the Customer and the Customer agrees that the Utility shall have exclusive right to serve the Customer for the purposes for which steam is required as set out above.[17]

As is evidenced by these contracts, for a long-time utilities have been concerned about redundant capacity and stranded costs. For the same long-standing reasons, the Commission should now conclude that such end-use restrictions continue to be appropriate.

22. The exclusive end-use provisions in the Connection Agreement are fair and reasonable to both the utility and other customers. Other customers have an interest in exclusive end-use provisions because rates will increase in order to recover the connection costs to serve the customer no longer taking service. As noted in Section 4 of the Service Agreement:

> The rates have been determined on the basis of the estimated connected loads and Design Capacity which are in turn based on the intended design and use of the Buildings. A Customer must not significantly change its connected load without the prior written approval of the Utility.

23. It would not be appropriate to remove this condition without other alterations to the contract to address the underlying principle to minimize stranded investment risk, which

[17] Customer Contract, dated September 20, 1995 (Creative Energy can supply this contract on a confidential basis)

is a fair and reasonable principle for new connections to a small utility.

E. Building System Compatibility

24. CEC submits that Section 8.2 of the Service Agreement is overly onerous and provides sweeping control. Section 8.2 of the Service Agreement states:

> The Customer shall not make any alterations to any Building System which may impact the provision of the Energy Services by the Utility without the prior written approval of the Utility.

As an alternative to Section 8.2, CEC submits that Creative Energy should in advance define alterations to the Building System which may impact the provision of the Energy Services.[18] Creative Energy cannot in advance identify such alterations or impacts. The Building System to be connected to the NES must be compatibility with the NES. There are provisions in the Connection Agreement to ensure compatibility at the time of connection[19]. Section 8.2 merely ensures compatibility on an ongoing basis. Contrary to the position of CEC, this is a reasonable and necessary provision.

25. The same is true of Section 8.3, Section 15.2(c) and Section 15.2(g). CEC objections should be rejected by the Commission.

26. CEC submits that section 3.5 should not be included in the Connection Agreement.[20] The purpose of section 3.5 is to ensure appropriate coordination of the commissioning of the Building System and the new service to the Building System. In order to ensure appropriate coordination and that occupants are not in the building before commissioning, Section 3.5 also ensures that an Occupancy Permit is not obtained before commissioning.

F. The Alleged Catch-22

27. CEC objects to Section 2.3 of the Service Agreement.[21] And then claims that Section 2.3 and Section 4.4 when read together put Creative Energy's customers into a "Catch-

[18] Ibid, para. 33
[19] Exhibit B-3-1, Connection Agreement, Section 3
[20] Ibid, para. 87
[21] Ibid. para. 15

22".[22] Again, Creative Energy submits that exclusivity of end-use is fair and reasonable to both the utility and other customers. The issue then is whether section 4.4 is fair and reasonable. Section 4.4 states:

> If the maximum Thermal Energy demand exceeds the Design Capacity, the Utility may, subject to BCUC approval, assess additional fees and charges to the Customer for usage exceeding such limits as approved by the BCUC, provided that if usage exceeds such limits, the Utility reserves the right to temporarily suspend or limit the Energy Services to reduce the load on the Neighbourhood Energy System.

28. CEC claims that by operation of this provision Creative Energy seeks to "strand customers with inadequate supply."[23] This interpretation of Section 4.4 should be rejected by the Commission Panel. Creative Energy does not seek to "strand customers with inadequate supply", rather it seeks to ensure that the NES is designed to meet the loads of all customers.
29. The Design Capacity of the NES will be the result of mechanical engineer assessments prepared by customers and the utility. In the event that customers load exceeds the Design Capacity there may be additional fees to customers but only with approval of the BCUC.
30. Creative Energy may also temporarily suspend or limit the Energy Services, but will have no reason to do so except when the maximum Thermal Energy demand exceeds the Design Capacity. In all other circumstances, it will not be in the financial interests of Creative Energy to suspend service. In any case the customer(s) will have an opportunity to complain to the BCUC of such temporary suspension. Creative Energy does not accept that approving the Connection Agreement will put customers into this Catch-22.
31. CEC also submits that section 15.3 that permits Creative Energy to discontinue service amounts to "enforcement of mandatory load requirements."[24] CEC also claims that section 15.3 is another instance of the Utility "imposing unnecessary regulation where the Commission traditionally avoids regulation as a matter of principle." Creative Energy

[22] Ibid., para. 17
[23] Ibid. para. 17
[24] Ibid, para. 40-41

disagrees.

32. The effect of section 15.3 is to permit Creative Energy to disconnect when a building is not taking any service, it is not for a change in load or when a tenant or owner in the building is no longer taking service. Creative Energy cannot foresee any circumstances when a "change in requirements in a small building resulting in a large number of occupants in other buildings being disconnected…". [25]small building res CEC fails to understand that Creative Energy provides service to buildings, not to individual customers.[26] Contrary to the views of CEC, Creative Energy submits that section 15.3 is fair and reasonable.

G. CEC Requested Addition to Connection Agreement

33. Creative Energy did not seek approval of mandatory connection provisions in the Franchise Agreement. Nevertheless, in Final Submissions CEC seeks approval of mandatory connection provisions in the Connection Agreement.[27] Contrary to the request of CEC, the Connection Agreement does not impose on Creative Energy ratepayers specific requirements that the Commission has already indicated it would not approve.[28] Creative Energy now objects to specific requirements regarding mandatory connection, when such requirements are not only beyond the scope of this proceeding but will be inappropriate for the reasons previously stated regarding end-use restrictions.

H. Term of Service Agreement

34. CEC submits that the 30 year term is excessive and unreasonably restricts developers and future strata owners.[29] CEC also claims that such a 30-year term violates Commission principles with regard to competitive markets. [30] Creative Energy submits that an initial 30 year term does not violate any such principles, assuming such principles apply to Connection Agreements, after a customer connects to a NES.

35. CEC fails to appreciate that competitive markets often include contracts with 30 year

[25] Ibid, para 41, ,third sentence
[26] Ibid, para. 41
[27] Ibid. para. 9 and 99
[28] CEC Final Submission, para. 7
[29] Ibid. para. 47
[30] Ibid, para. 48

terms. Such terms are necessary for the parties to the contract to meet future obligations and to be assured of future benefits. A long term does as CEC alleges "handcuff" the parties, but in a manner not only consistent with competitive markets, but CEC's proposal to restrict such long terms would in fact be inconsistent with competitive markets. So if there are Commission principles "with regard to not impeding competitive markets" then such principles should enable long terms such as 30 years.

I. The Regulatory Compact, Commission Jurisdiction, and End-Use

36. CEC submits that the option to select alternatives for end-use is established and foundational to the regulatory compact and to the basis for historic regulatory principles.[31] This interpretation of the regulatory compact is not "established and foundational" and there is no basis in "historic regulatory principles" for such an interpretation. In fact, CEC does not provide any support for their interpretation of the regulatory compact. In the absence of support for this interpretation of the regulatory compact, CEC arguments based on their interpretation of the regulatory compact should not be considered by the Commission in its Decision.

37. CEC submits that the Commission does not have jurisdiction to approve documents that define/limit customer activities.[32] As noted above, the Commission has previously assumed jurisdiction to approve end-use restrictions. Section 59(2) expressly grants to the Commission jurisdiction to: "extend to all persons under …conditions for service". The conditions for service include end-use restrictions.

J. Section 44.1 Objectives

38. CEC submits that the Commission has a requirement under the UCA to regulate the degree to which cost-effective conservation and efficiency can replace energy supply as set out in Section 44.1.[33] The evidence overwhelming supports the conclusion that a NES is the preferred means, in high-density neighbourhoods, to achieve cost-effective conservation and reduce GHG emissions. Moreover, global trends are aligned with the development of NES as a means to achieve cost-effective conservation and to reduce

[31] Ibid., para. 59
[32] Ibid., para. 54
[33] Ibid, para. 61

GHG emissions.

39. So it is difficult to understand the CEC submission that the Connection Agreement contradicts the objectives in Section 44.1.[34] It is clear that this is yet one more attempt by CEC to frustrate the objectives of all levels of government to reduce GHG submissions by means of BCUC Decisions that do not support the development of NES. Although such past attempts have been successful, this attempt should be denied for at least two reasons. First, because utilization of mandatory load is beyond the scope of this proceeding. Second, because exclusivity provisions in the Connection Agreement are consistent with the objectives of Section 44.1. Nevertheless, given CEC has once again raised the application of Section 44.1 in the context of a NES, Creative Energy submits that the Commission should consider the CEC submissions regarding Section 44.1 in the final decision.

K. Reasons for Denying Approval of Connection Agreement and the Five Requests

40. Creative Energy provided an expensive and extensive response to the Commission request for further evidence to support the Application, as noted in detail in the cover letter to the Application. CEC makes submissions regarding the Commission five requests for information.[35] These submissions are not nearly as persuasive as those of BCSEA that Creative Energy recommends to the Commission.

L. Conclusion

41. In the Application cover letter, Creative Energy requested interim approval of the Connection Agreement by July 15, 2016. The Connection Agreement was first filed for approval on April 17, 2015. In Order G-49-16, the Commission stated that approval of interim rates for the NEFC hot water division effective August 1, 2016 would be addressed in due course. Creative Energy once again requests that its interim application be approved, this time effective February 1, 2017.

[34] Ibid. para. 61
[35] CEC Final Submissions, para. 19-21

City Builders

Energy Innovators

Creative Thinkers

CREATIVE ENERGY NES

Building Compatibility Design Guide – February 17

CREATIVEENERGY

CREATIVE ENERGY VANCOUVER
PLATFORMS INC.

Suite 1 – 720 Beatty Street
Vancouver, Canada
V6B 2M1

604 688 9584 TEL
604 688 2213 FAX
creativeenergycanada.com

CREATIVENERGY

Table of Contents

1. Introduction & Intent 3
2. General Steps to Ensure Building Compatibility to the NES 3
3. Background 4
   Neighbourhood Energy System (NES) Components 4
4 5
6 Contact Information 6
Appendix 1 – NES Design Overview 7
   Energy Transfer Station Overview 7
   ETS Control Strategy 9
   Domestic Hot Water Options 11
   Additional Services Available: 14
Appendix 2 – Base Building Heating System Design Guidelines 15
   1. Hydronic Radiant Floor Heating 15
   Fin Type Baseboard Convectors / Perimeter Radiators 15
   2. Fan Coils 16
   3. Ventilation Make-Up Air Units 16
   4. Hybrid Heat Pumps 16

1. Introduction & Intent

Creative Energy Vancouver Platforms Inc. (CE) is a publically regulated utility that provides district energy services to buildings in the Neigbourhood Energy System (NES).

This document summarizes building design strategies required of developers in anticipation of connection to a Neighbourhood Energy System (NES). Developers are required to adopt these standards and make appropriate provisions in building mechanical design to enable them to take full advantage of the benefits offered through future NES connection.

The goal of the guidelines is to optimize NES connection, thereby creating seamless integration and operation. Compliance with the guidelines will improve overall building mechanical system efficiency.

This Guideline is structured as follows:

- Introduction
- List of general steps to follow for the compatibility coordination,
- General information regarding Creative Energy
- Overview of District energy and its benefits.

Appendix 1 and Appendix 2 contain the technical guidelines for the base building engineer to follow.

2. General Steps to Ensure Building Compatibility to the NES

The Utility generally will install, own and operate all NES equipment within the customer building up to and including Energy Transfer Stations – further information is provided in Section 4. The following steps are undertaken between the Utility and the Building mechanical engineer to ensure compatibility to the NES.

During Design Stage:

1. Kickoff Meeting with Building Developer and Design Engineer – CE to supply copy of Building Compatibility Design Guide to Building Engineer to provide a copy of "Project Statistics" (from Architect).
2. Building Engineer to provide Building System Application (form attached) with copies of relevant design information (drawings, equipment schedules and specifications), plus load and temperature details at the earliest stage possible – minimum 90 days before Building Permit application.
   NB: If an energy model has been performed, please provide energy profile summaries.
3. CE to review and provide feedback on Building System Application within 90 days.
4. Ongoing reviews of the Building System Application by CE and Engineer.
5. Building Engineer approves (sealed by professional engineer of record) the final Building System Application.
6. CE signs off the Building System Application
7. Developer applies for Building Permit
8. Amendments to Building System Application to be approved by CE

During Construction and Commissioning Stage

1. Construction of building mechanical systems starts
2. CE to review relevant submittals/Shop Drawings to ensure compatibility.
3. Connection to ETS
4. Building mechanical system as-builts provided to CE for review.
5. Remedies completed by building owner, as required.
6. Commissioning and Functional testing
7. Occupancy permit and Energy Service commencement

3. Background

Neighbourhood Energy System (NES) Components

The NES is comprised of three major components; the Energy Centre, the distribution network, and the customer energy Transfer Stations. The latter is the key equipment located in the customer building. All components are owned and operated by the Utility.

1. **Neighbourhood Energy Centre (EC):** A centralized energy plant employing one or more technologies to produce hot water. Energy sources may change over time in response to changes in fuel prices and technological innovation. The long-term objective is for energy

production to be provided by renewable technologies. Natural gas boilers may be used for back-up and peaking energy, and also as an interim heat source until there is adequate energy demand to support renewable technology.

2. **Thermal Distribution Piping System (DPS):** Consists of a two pipe system providing separate supply and return loop hot water, buried in the streets between the Community Energy Centre and the building Energy Transfer Stations. The mains will typically be located in adjacent public Rights of Ways (ROW). Branch connections for each customer will typically enter the building at approximately 1000 mm below grade. For new proposed buildings sleeves can be placed ahead of time, otherwise cores are common. Water sealing will be provided per building specifications.

3. **Energy Transfer Stations (ETS):** Each NES customer building has an ETS as the interface between the NES and the in-building thermal distribution system. The ETS includes equipment installed and operated by the neighbourhood energy provider including the necessary pipes, heat exchangers, associated controls and energy meters. This equipment is typically located inside the customer building mechanical room, which preferably is either at P1 or L1 and adjacent the branch connection point of entry. Information gathered by the Utility at the ETS, e.g. metering data, will be available in real time to the customer (method to be determined at design stage). See **Appendix 1** for more information on the building connection.

Further information can be found at the following:

1. Creative Energy's website, www.creativeenergycanada.com

2. International District Energy Association website, http://www.districtenergy.org/what-is-district-energy/

4

6 Contact Information

For additional information contact Creative Energy at info@creativeenergycanada.com or 604-688-9584.

Appendix 1 – NES Design Overview

To achieve reliable and efficient operation of the neighbourhood energy system (NES) high temperature differentials (ΔT) between the supply and return water is required. This is critical to minimize the heat and pumping losses and maximize the energy center (plant) efficiency to ensure that the NES system can meet optimal design efficiencies. The following table outlines the NES and base building temperature expectations (Note, these are maximums).

Temperature C (*note 1)	NES Design		HVAC Design	
	Winter	Summer	Winter	Summer
Supply	95	65	70	60
Return	55	50	50	45
Delta-T	40	15	20	15[JM1]

**Note 1 – if customers require "condensing efficiencies", temperatures will be reviewed.*

The building heating system must be designed to operate in a temperate regime that will be compatible with the neighbourhood energy service.

Energy Transfer Station Overview

The following figures outlines how a building connects to the NES. Typically the NES piping comes into the building approximately 1000 mm below grade and enters directly into the mechanical room where the ETS is located on the Utility side of the ETS. The ETS is the only equipment required for the building and replaces boilers. Isolation valves will provided immediately upon entering. A primary service meter located on the Utility side of the ETS indicates the demarcation point between the utility and the building.

Sub-metering on the building side of the ETS is possible – if this is a service of interest please contact the Utility.

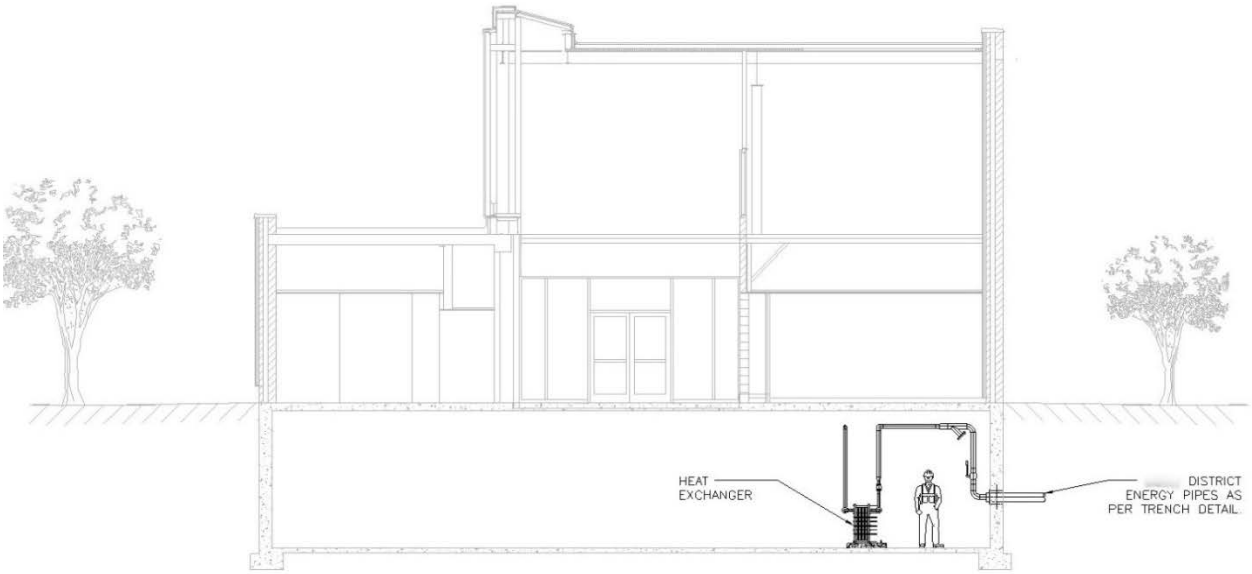

Standard practice has a single heat exchanger installed for the space heating and domestic hot water of each customer. Depending on flow range, multiple control valves can be provided to accommodate a range of seasonal loads.

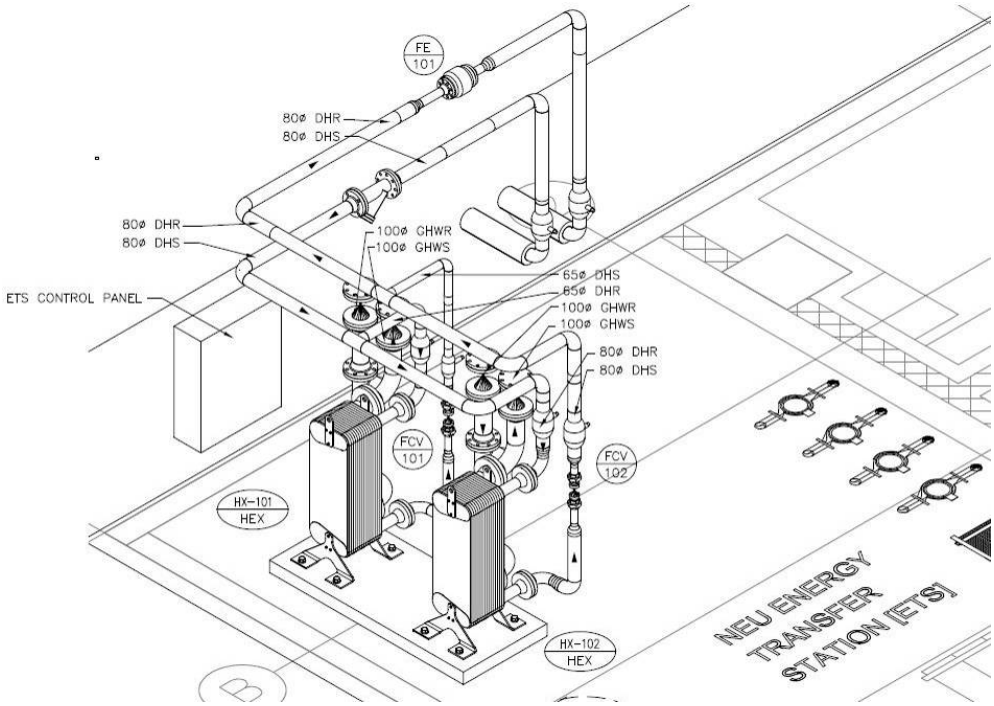

ETS Control Strategy

The building heating system shall be designed for variable volume flow operation (preferably with variable speed pumps to minimize the pumping power requirements and to achieve the minimum water temperature drop). All control valves (terminal units and zone valves) are to be of 2-way modulating (or on/off for Fan Coil Units) type. The system must not include 3-way valves that allow flow to by-pass the heating elements.

Figure A-1. Temperature Reset Curve for Vancouver

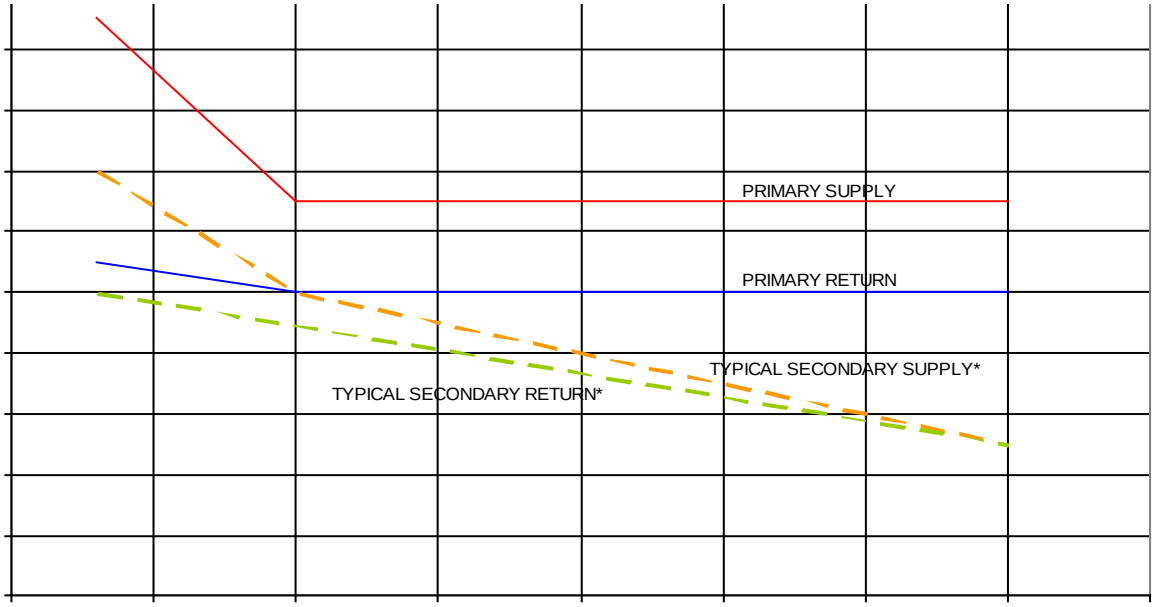

Notes:

* Space heating only, direct primary domestic hot water heating with maximum 60°C domestic hot water supply

Primary supply / return = Neighbourhood heating system supply / return

Secondary supply / return = Building mechanical system supply /return

The building (secondary) supply temperature shall be reset based on outside air temperature according to the guidelines provided in Figure A-1 above. The temperature reset strategy needs to be designed to allow the control valves to operate within the middle portion of their operating range. This prevent laminar flow conditions (by maintaining tube velocities above minimum) and thus maintaining a high heat transfer coefficient through the heating coils and other terminal devices, producing low return temperatures at all load conditions.

As shown in Figure A-2 below, the primary (utility) system flow though the ETS is controlled to achieve the design supply temperature in the secondary (building) system.

Figure A-2. In Building ETS Flow Schematic

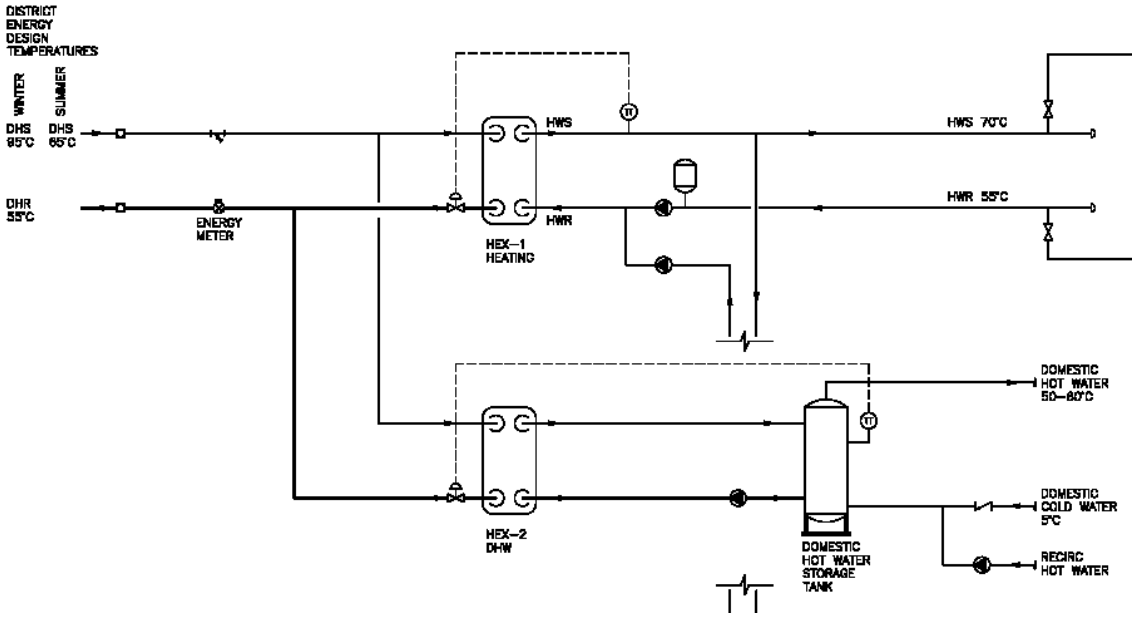

Domestic Hot Water Options

To optimize domestic hot water ("DHW") load it is essential to centralize the DHW system, preferably in one main mechanical room.

There are options available to for DHW systems. The table below outlines the options and suitability with NES:

Setup Type	Description	Pro's	Con's
Instantaneous	No storage	Lower supply temps. Lower return temps for NES.	Larger heat exchanger required. Need tempering.
Semi-Instantaneous	Small buffer storage		
Charging	Traditional storage		

The preferred design for NES performance is the 'semi-instantaneous' system, for buffering purposes. This system optimizes efficiency while reducing capital costs for hot water storage. Note, in all setups cold water make-up should be introduced directly to the ETS, rather than to the storage tanks.

Figure A-3. DHW INSTANTANEOUS SET-UP

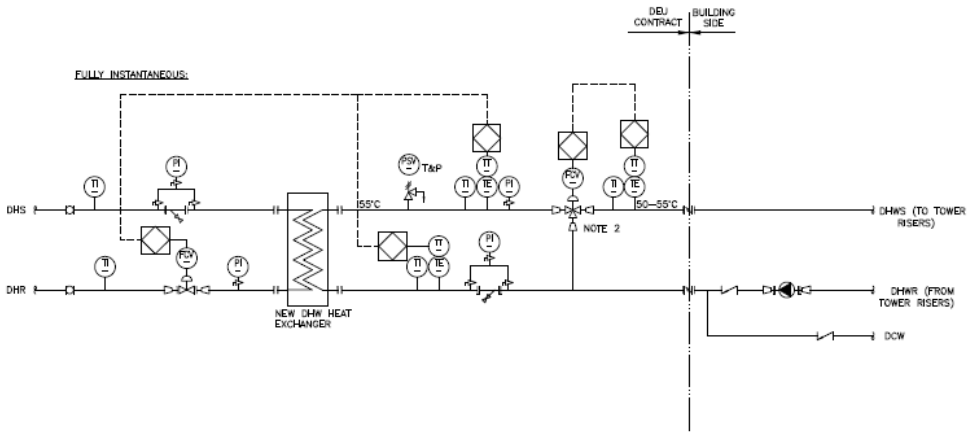

Figure A-4
. SEMI-INSTANTANEOUS SET-UP

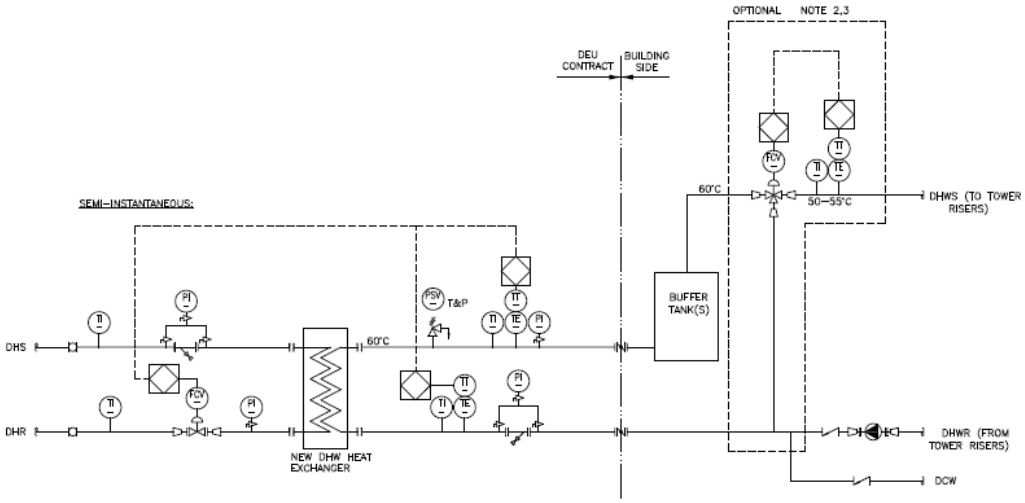

Figure A-5. **CHARGING SET-UP**

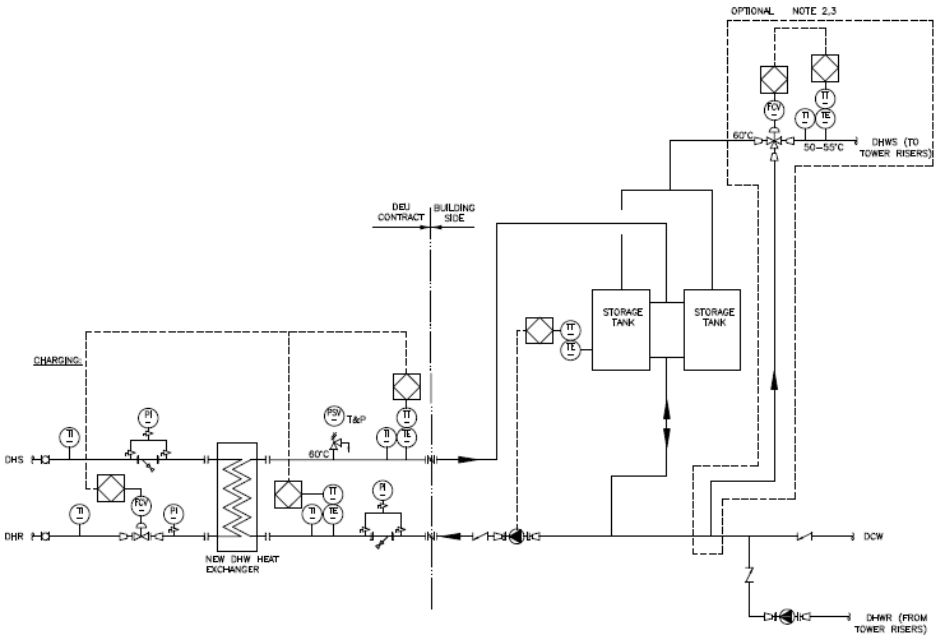

The DHW system is to be designed in accordance with the design temperature specified below.

Domestic cold water: 5°C
Domestic hot water: 60°C

Additional Services Available:

Other services, including steam for humidification or other process loads, central cooling and sub metering. Please contact Creative Energy to discuss other services.

Appendix 2 – Base Building Heating System Design Guidelines

The hot water hydronic heating system shall be designed to provide all of the space heating and ventilation air heating requirements for the individual suites, hallways/stairwells and other common areas in the building, supplied from a central mechanical room within the building. Hot water shall be distributed, via a 2-pipe (direct return) piping system, to the various heating elements throughout the building.

The specified ΔT shall be regarded as a minimum requirement, and a larger ΔT is desirable to further reduce the pipe sizes and associated valves, fittings, etc., pumping requirements and energy losses. The building return temperatures must be kept to a minimum to allow the NES to operate in a cost-effective manner.

Hydronic heating can be delivered in a variety of forms including radiant floor/ceiling systems, hot water base-boards, fan coils, etc. The building (secondary) heating system shall be designed according to the maximum design temperatures specified below for several common types of systems.

The following systems are deemed compatible with the NES.

1. ***Hydronic Radiant Floor Heating***

Floor heating shall be designed for the following maximum temperatures:

Hot water supply:	45°C
Hot water return:	35°C

Fin Type Baseboard Convectors / Perimeter Radiators

The radiant heating shall be provided by 2-pass commercial fin type radiators or perimeter style radiant panels. The baseboard convectors and radiant panels shall be designed for the following maximum temperatures:

Convectors:	Hot water supply:	70°C
	Hot water return:	50°C
Radiators:	Hot water supply:	60°C
	Hot water return:	45°C

2. *Fan Coils*

Packaged fan coil units designed with hot water coils can be used to provide individual unit heating. The fan coil units shall be designed for the following maximum temperatures:

Hot water supply:	70°C
Hot water return:	50°C

3. *Ventilation Make-Up Air Units*

The ventilation (make-up air) requirements shall be provided by air handling units designed with hot water/glycol heating coils. The heating coils shall be designed for the following maximum temperatures:

Hot water supply:	65°C
Hot water return:	45°C

4. *Hybrid Heat Pumps*

Hybrid heat pump units designed with hot water coils can be used if cooling is required. The major benefit of these units is that the compressor only runs when cooling is required and shuts down when in heating mode. This results in lower operating costs, reduced maintenance, reduced noise, extended unit life, and a more efficient system due to heat recovery options.

The following schematic illustrates the different operating modes.

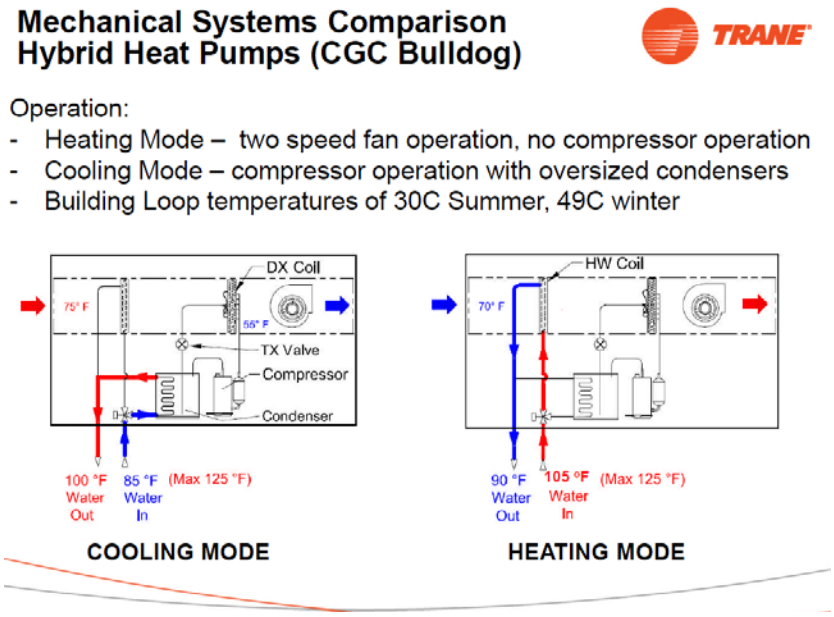

The hybrid heat pump units shall be designed for the following maximum temperatures:

Hot water supply:	51.7 C (125°F)
Hot water return:	32.2 C (90°F)

The following systems are not compatible with NES and should not be considered for the building mechanical system:

- Electric baseboards
- Water Source Heat Pumps
- VRF systems

CREATIVENERGY

Building Service Application

Building Name and Address:	
Conditioned Floor Area:	
Intended Use and Occupancy:	
Mechanical Engineer of Record:	
Building services requested (circle):	**DHW / Heating / Cooling / Other** **If Other, please specify**
Target Date for Service[1]:	

GENERAL STEPS OF BUILDING PEER REVIEW FOR COMPATIBILITY:

1. Kickoff Meeting with Building Developer and Design Engineer – CE to supply copy of Building Compatibility Design Guide to Building Engineer to provide a copy of "Project Statistics" (from Architect[AH1]).
2. Building Engineer to provide Building Services Application (form attached) with copies of relevant design information (drawings, equipment schedules and specifications), plus load and temperature details at the earliest stage possible – minimum 90 days before Building Permit application[AH2].

[1] Target Date is for building occupancy. CE will endeavour to have the ETS commissioned a minimum 30 days prior to building occupancy. Construction heat service will be accommodated when possible.

NB: If an energy model has been performed, please provide energy profile summaries.

3. CE to review and provide feedback on Building Services Application within 30 to 90 days, depending on complexity and response.
4. Ongoing reviews of the Building Service Application by CE and Engineer.
5. Building Engineer approves (sealed by professional engineer of record) the final Building Service Application.
6. CE signs off the Building Services Application
7. Developer applies for Building Permit
8. Amendments to Building Service Application to be approved by CE
9. Construction of building mechanical systems starts
10. CE to review relevant submittals/Shop Drawings to ensure compatibility.
11. Connection to ETS
12. Building mechanical system as-builts to be provided to CE for review.
13. Remedies by building owner, as required.
14. Commissioning and Functional testing
15. Occupancy permit and Energy Service commencement

Floor Area Breakdown (m2):

Residential	Commercial	Other (if applicable)

Estimated Loads:

	Residential	Commercial
Space Heating, KW peak		
Space Heating, MWh annual		

Space Heating supply/return temperatures, C (at ETS)		
DHW Heating, KW peak		
DHW Heating, MWh annual		
DHW supply/return temperatures, C (at ETS)		
Cooling, KW peak		
Cooling, MWh annual		
Heat Recovery from Cooling, KW and MWh		

COMPATIBILITY CHECK LIST

Item:	Units	Engineer Initial	Comments:
HVAC system is hydronic with direct return arrangement			
Heating loads 100% served by hydronic system			
No other sources of heat generation other than that allowed (solar or waste heat recovery)			Demonstrate no more than 1% via prohibited equipment (typ. for remote area needs)
Space provided for Energy Transfer Station			Location and sq. meters; preferable at P1 level – attach drawing of location
Compatible with district energy supply/return temperatures			
Designed to minimize return temperatures			

DHW configured as: _____			Choose from instantaneous, semi-instantaneous, or charging (see Guide)
HVAC system design fully variable flow with 2-way control			
HVAC system design with outdoor air temperature reset strategy			

Certification:

I certify that I am a registered professional as defined in the BC Building Code.

_____
Registered Professional of Record's Name (Print)

_____
Address

_____
Phone No.

_____
Date

Professional's Seal, Signature and Date

DE Utility review by: _____

Date: _____