bcuc
British Columbia
Utilities Commission

Suite 410, 900 Howe Street
Vancouver, BC Canada V6Z 2N3
bcuc.com

P: 604.660.4700
TF: 1.800.663.1385
F: 604.660.1102

FortisBC Inc.

Application for a Certificate of Public Convenience and Necessity for the Grand Forks Terminal Station Reliability Project

---

Decision
and Order C-2-19

July 25, 2019

Before:
R. I. Mason, Panel Chair
W. M. Everett, QC, Commissioner
B. A. Magnan, Commissioner

TABLE OF CONTENTS

Page no.

1.0 Introduction

1.1 Background

On November 19, 2018, FortisBC Inc. (FBC) filed an application with the British Columbia Utilities Commission (BCUC) for a Certificate of Public Convenience and Necessity (CPCN) pursuant to sections 45 and 46 of the *Utilities Commission Act* (UCA) for the Grand Forks Terminal Station (GFT) Reliability Project (Project) (Application).[1]

Currently, FBC customers in the Grand Forks area are supplied power at 161 kV from both AS Mawdsley Terminal Station and from Kettle Valley Terminal Station. The 161 kV voltage is stepped down to 63 kV via a single transformer at GFT known as GFT T1, which is now 53 years old, exceeding FBC's 40-year expected lifespan for the transformer.[2]

In the event of an outage of GFT T1, backup supply is provided from Warfield Terminal Station (WTS) via transmission lines 9 Line (9L) and 10 Line (10L). FBC states that backup supply from WTS is not sufficiently reliable, owing to the condition of lines 9L and 10L, hence a dependable alternative is required to maintain reliability for customers in the Grand Forks area in the event of an outage or failure of the GFT T1 transformer.[3]

1.2 Approval Sought

In its Application, FBC applies for a CPCN to authorize the following components of the Project: [4]

- Installation of a second transformer at GFT by purchasing a new 161/63kV transformer as described in the Application;
- Removal of 44.6 km of the 65.4 km of transmission lines 9L and 10L from Christina Lake substation (CHR) to Cascade substation (CSC); and
- Repurposing of the remaining 20.8 km of transmission lines 9L and 10L to distribution lines to continue to supply power to customers.

The estimated cost of the Project is $13.171 million, including allowance for funds used during construction (AFUDC) and the cost of removing a portion of transmission lines 9L and 10L.[5]

1.3 The Applicant

Incorporated in 1897, FBC is an investor-owned utility that has grown to serve approximately 175,000 customers, both directly and indirectly, through the generation, transmission, distribution and sale of electricity primarily in the southern interior BC region. Based in Kelowna, BC, FBC's workforce of approximately 500 full-

[1] Exhibit B-1, p. 1
[2] Ibid., p. 2.
[3] Ibid.
[4] Ibid., p. 1.
[5] Ibid.

time and part-time employees maintains a network that includes four hydroelectric generating units with an aggregate capacity of 225 MW and approximately 7,200 km of transmission and distribution power lines for the delivery of electricity to major load centres and customers in its service area.[6]

1.4 Regulatory Process

By Order G-250-18, dated December 21, 2018, the BCUC established a regulatory timetable for reviewing the Application which consisted of:

- Intervener registration; and
- One round of information requests (IR).

By Orders G-43-19, dated February 28, 2019, and G-68-19 dated March 25, 2019, the BCUC amended the regulatory timetable to allow for a second round of IRs, followed by submission of further evidence.

By Order G-77-19, dated April 9, 2019, the BCUC subsequently amended the regulatory timetable to include submission dates for final and reply arguments.

Six interveners registered in the proceeding: Alan Wait, Norman Gabana, British Columbia Municipal Electrical Utilities (BCMEU), Industrial Customers Group (ICG), British Columbia Old Age Pensioners' Organization et. al. (BCOAPO) and the Commercial Energy Consumers Association of British Columbia (CEC). Seven letters of comment were submitted to the BCUC.

1.5 Legislative Framework

1.5.1 Utilities Commission Act

Section 45(1) of the UCA stipulates that except as otherwise provided, after September 11, 1980, a person must not begin the construction or operation of a public utility plant or system, or an extension of either, without first obtaining from the BCUC a certificate that public convenience and necessity require, or will require, the construction or operation of the plant or system.[7]

Section 46(3.1) of the UCA stipulates that in deciding whether to issue a CPCN applied for by a public utility other than the authority (as defined in the UCA), the BCUC must consider: [8]

> a) the applicable of British Columbia's energy objectives,
>
> b) the most recent long-term resource plan filed by the public utility under section 44.1, if any, and
>
> c) the extent to which the application for the certificate is consistent with the applicable requirements under sections 6 and 19 of the Clean Energy Act [CEA].

[6] Exhibit B-1, p. 9.
[7] *Utilities Commission Act*, RSBC 1996, c. 473
[8] Ibid.

Section 41 of the UCA stipulates that a public utility that has been granted a CPCN and has begun any operation for which the certificate is necessary, must not cease operation or a part of it without first obtaining permission from the BCUC.

1.5.2 CPCN Guidelines

The BCUC's CPCN Guidelines provide general guidance regarding the BCUC's expectation of the information that should be included in a CPCN application while providing the flexibility for an application to reflect the specific circumstances of the applicant, the size and nature of the project and the issues raised by the application.[9]

A CPCN application submitted under sections 45 and 46 of the UCA should contain information on the following:

- Applicant;
- Project Need, Alternatives and Justification;
- Consultation;
- Project Description;
- Project Cost Estimate;
- Provincial Government Energy Objectives and Policy Considerations; and
- New Service Areas.[10]

1.6 Previous Relevant Decisions / Regulatory History

In Order G-110-12, the BCUC rejected FBC's proposed expenditures related to installing a second transformer at GFT because the need for additional reliability was not apparent. The BCUC also directed FBC to file a CPCN should it intend to pursue the installation of a second transformer at GFT.[11]

In Order G-80-16, the BCUC confirmed the requirement for FBC to file a CPCN should it wish to add a transformer at GFT. The Order also granted FBC approval to "flow through the actual capital expenditures outside of the formula-driven capital under the PBR Plan".[12]

2.0 Description of the Proposed Project

2.1 Current Situation

The existing Grand Forks area transmission system is illustrated in Figure 1 below:

[9] BCUC CPCN Guidelines, p. 1.
[10] Ibid., pp. 4–9.
[11] FortisBC Inc. Application for the 2012-2013 Revenue Requirements and Review of 2012 Integrated System Plan, Decision and Final Order G-110-12 dated August 15, 2012, p. 95.
[12] FortisBC Inc. Application for Approval of Treatment for Major Project Capital Expenditures under the Multi-Year Performance Based Ratemaking Plan for 2014-2019, Final Order G-80-16 dated June 3, 2016, Directive 3, p. 2.

Figure 1 – Grand Forks Area Transmission System[13]

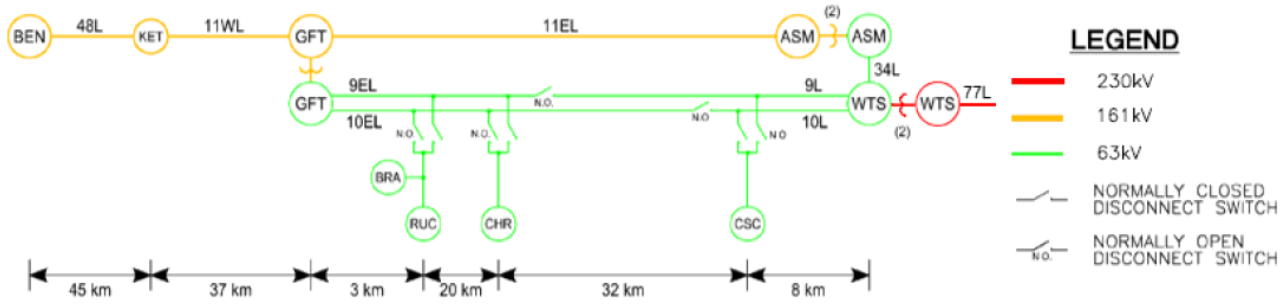

Note that "N.O." means 'normally open' (i.e. power does not flow)

Currently, FBC customers in the Grand Forks area are supplied power from both the 11 Line E (11EL) 161 kV transmission line from AS Mawdsley Terminal Station (ASM) and the 11 Line W (11WL) 161 kV transmission line from Kettle Valley Terminal Station (KET). The 161 kV voltage is stepped down to 63 kV via a single 161/63 kV transformer known as GFT T1[14]. Under the current configuration, local 63kV transmission is supplied from the following sources:

- GFT T1 supplies the Grand Forks Terminal T3 distribution transformer (GFT T3), and the distribution substations Ruckles (RUC), Christina Lake (CHR) and Bradford/Roxul (BRA); and
- Warfield Terminal Station (WTS), which is located near Warfield, supplies the Cascade distribution substation (CSC).

2.2 Proposed Project

The Project can be separated into two distinct parts, identifiable by the location and nature of the work required.

Grand Forks Terminal

The Project requires the purchase and installation of a second 161/63kV transformer (GFT T2) at GFT, as a substitute for the remediation of lines 9L and 10L, as described below.

GFT is located in a rural/farming area on the outskirts of Grand Forks.[15]

[13] Exhibit B-1, Figure 3-1, p. 12.
[14] Ibid., p. 2.
[15] Exhibit B-2, BCUC IR 6.2.

Figure 2 – Grand Forks Terminal Substation[16]

All work at GFT is scheduled to take place within the existing substation. In addition to the installation of GFT T2 and new circuit breakers, the scope of the Project involves installing new foundations and support structures, including sound barriers and new protection, control and metering equipment.[17]

GFT currently consists of a single 161/63kV transformer (GFT T1). GFT T1 was first placed in service in 1965 and has exceeded its expected useful life of 40 years. A condition assessment performed by ABB in 2018 concluded that GFT T1 should not remain in service for more than 15 years.[18]

A spare transformer (OLI T1) is also located at the Grand Forks substation, which is sized to replace GFT T1 in the event of an emergency. OLI T1 can also be used as an emergency spare at two other substations within the vicinity of Grand Forks.[19] Figure 3 below provides a simplified single line drawing of the Grand Forks area and describes some of the work to be completed at both GFT, and along lines 9L and 10L.

[16] Exhibit B-1, Figure 5-2, p. 35.
[17] Exhibit B-1, p. 33.
[18] Ibid, p. 15.
[19] Exhibit B-2, BCUR IR 2.10

Figure 3 – Grand Forks Area Single Line Drawing[20]

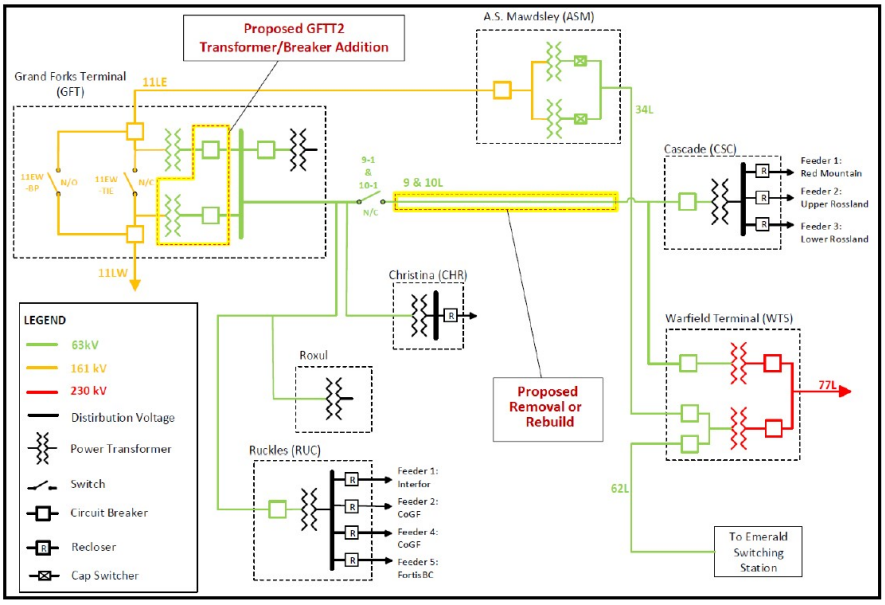

Lines 9L and 10L

The Project also includes the removal of 44.6 km of the total 65.4 km of transmission lines 9L and 10L between CHR and CSC, and repurposing of the remaining 20.8 km of transmission lines 9L and 10L to distribution lines. Work on lines 9L and 10L will start once installation of the second transformer at GFT T2 is completed.[21]

The transmission lines 9L and 10L run from WTS to GFT along the following route:

Figure 4 – Geographic Map of 9L and 10L[22]

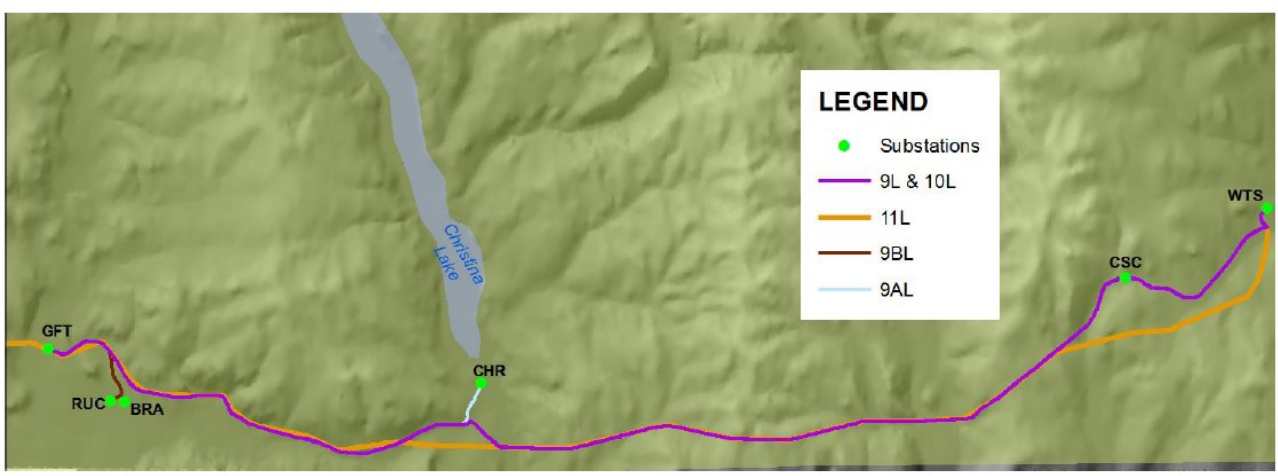

Under the current Grand Forks area transmission system configuration, power does not flow along 9L and 10L – in normal operation, 9L is open and 10L is de-energized between CHR and CSC. Instead, 9L and 10L operate as a secondary source of power to backup service provided through GFT T1 and are each limited to a maximum

[20] Figure 5-1 on page 34 of Exhibit B-1 was revised in Exhibit B-6, ICG IR 12.1.
[21] Exhibit B-1, p. 41.
[22] Ibid., Figure 3-2, p. 13.

loading of 27MW, due to voltage stability.[23] If they were operated in parallel, they could serve a maximum of 45MW. However, due to the deteriorated condition of 10L, it is unlikely that 10L would be fit to be energized from WTS to GFT in an emergency.[24]

9L and 10L transmission lines were originally constructed in 1908 using wood pole designs, and both pass through the Rossland mountain range. While many of the older poles have been replaced, approximately 32 percent and 76 percent of the poles used along 9L and 10L, respectively, have been in service since 1960 and earlier. A 2016 condition assessment of 9L and 10L found that 37 percent of the structures on 9L and 69 percent of the structures on 10L required replacement. The report concluded that 9L and 10L are generally in quite poor condition overall and are a considerable risk to reliability and safety.[25]

Work on lines 9L and 10L will be split into two stages. Stage One involves the removal of a portion of 10L, scheduled to occur from the third quarter of 2020 to the fourth quarter of 2020, and Stage Two involves the removal of a portion of 9L,[26] scheduled to occur from the first quarter of 2021 to the second quarter of 2021. This staging is intended to address fire risk posed in summer months, to accommodate any potential outage or failure of GFT T1 before the second transformer is placed in service, and to facilitate the connection of a second circuit breaker, to be installed with GFT T2.[27]

2.3 Project Alternatives

FBC evaluated three alternatives for the Project. Its preferred alternative, Alternative B, is the Project described above. The other two alternatives which were not selected are described below.

FBC also considered consolidating lines 9L and 10L into a single circuit but rejected this option because the circuit could not support the load needed for the Grand Forks area.[28]

Alternative A

Alternative A is similar to the Project in that a second transformer would be installed at GFT to serve as a backup to GFT T1. As with the Project, a portion of transmission lines 9L and 10L between CSC and CHR substations would be removed and the remaining repurposed.[29]

Unlike the Project, however, Alternative A would involve installing OLI T1 as the second transformer rather than purchasing and installing a new transformer and leaving OLI T1 as an on-site spare, as planned in the Project. As a result, there would be no on-site spare transformer at GFT that would be able to serve as a replacement for the other two locations in FBC's system for which OLI T1 is the only designated backup.[30]

The capital cost of Alternative A would be $11.3 million.

[23] Exhibit B-6, ICG IR 3.1
[24] Exhibit B-1, p. 14.
[25] Exhibit B-1, p. 16.
[26] Exhibit B-1, p. 33.
[27] Ibid., p. 36.
[28] Ibid., p. 20.
[29] Ibid., p. 21.
[30] Exhibit B-2, BCUR IR 2.10

Alternative C

Rather than install a second transformer at GFT, Alternative C would involve rehabilitating transmission lines 9L and 10L.[31] This alternative would provide backup supply to GFT via 9L and 10L from WTS in the event of a GFT T1 failure, to a maximum of 45MW.

The capital cost of Alternative C would be $9.259 million.

3.0 Project Justification

In this section, the Panel reviews the Application in terms of the criteria set out in the CPCN Guidelines.

3.1 Project Need

Load

FBC provided comprehensive GFT substation load data for the years 2014–2018.[32] The data set discloses the loading on transformer GFT T1 has been greater than 27MW for much of each winter in the years 2014–2018. For example, between December 4, 2017 until Jan 12, 2018, load was greater than 27MW for an average of 3.5 hours per day.[33] 2017/2018 winter data was anomalous in that January 2018 had lower loading than the winters of 2014 through 2017.

The data set further discloses the loading on transformer GFT T1 has been greater than 27MW for some of each summer in the years 2014–2018 provided. In summer 2018, loads were greater than 27MW on 6 days in June for between 2 and 14 hours per day, and again on 26 days from July 12 to August 17 for between 6 and 14.5 hours per day.[34] Summer 2018 loading was significantly higher than previous years: Summers of 2014–2017 had approximately 10 days per year with loads persistently over 27MW[35].

Over the past five years, the maximum winter peak was recorded at 33,583 kVA in winter 2016/17 and the maximum summer peak was recorded at 33,015 kVA in summer 2018.[36]

Reliability of the Grand Forks Area

In the event of an outage or failure of GFT T1, power supply would be lost at four distribution substations: GFT, BRA, RUC and CHR. Supply can be provided to these distribution substations from WTS via the 63kV transmission lines 9L and 10L. However, this secondary 63kV supply is unreliable given the age and condition of both 9L and 10L.[37]

The maximum load that can be supplied by either line 9L or 10L is 27 MW. If both lines are operated in parallel, they can supply a maximum load of 45 MW. [38]

---

[31] Exhibit B-1, p. 23.
[32] Exhibit B-5, Attachment 7.1.
[33] Exhibit B-5, Appendix 7.1, Winter load data – live spreadsheet
[34] Ibid., Summer load data – live spreadsheet
[35] Ibid., Summer load data – live spreadsheet
[36] Ibid., Winter load data – live spreadsheet; Summer load data – live spreadsheet
[37] Exhibit B-1, p. 11.
[38] Ibid., p. 14.

To restore power to the four distribution substations, the field disconnect on line 9L between CSC and CHR would need to be closed.[39] This field disconnect is not operable remotely; to close the disconnect, a field crew would need to be called out to close it manually. Manually closing the field disconnect takes "…on the order of hours…" to complete.[40]

If load in the GFT area was greater than 27MW at the time of an outage, line 10L would also have to be energized from WTS to GFT to accommodate the entire load.[41] As referenced above, line 10L must be visually assessed and potentially rehabilitated before it can be placed in service. Depending on the time of year and condition of the line this may not be possible.[42] The condition of 10L is extremely poor, and the 32km section between CSC and CHR is normally de-energized.[43]

In the event of a failure of GFT T1, the procurement of a new transformer is expected to take longer than one year.[44] In the meantime, the onsite spare transformer OLI T1 could be installed as an emergency backup.[45] The installation would take 3–4 weeks, as GFT T1 would need to be removed, and OLI T1 put into its place on the existing pad.[46]

OLI T1 is also the only designated emergency spare transformer for two other stations in the FBC system.[47]

Positions of the Parties

FBC states that "Reliability is the primary driver of the GFT Reliability Project". FBC does not claim that the Project is required to serve load in the Grand Forks area in normal conditions; rather, that the Project is required to supply 100 percent of load in the event of an outage of the GFT T1 transformer. [48]

FBC argues that the backup supply in the event of a GFT T1 outage requires both lines 9L and 10L to be operating in parallel to meet the peak demand of 34 MVA in winter and 29 MVA in summer, since either 9L or 10L operating alone provides only 27 MW of power.[49] FBC adds that lines 9L and 10L are both in "poor condition" between CHR and CSC, part of the route required to provide power to the Grand Forks area. Since line 10L is in "extremely poor condition", it is normally not energized between CHR and CSC. In the event of an outage of GFT T1, it may not be possible to energize line 10L if it is inaccessible in winter due to the mountain terrain through which it runs.[50]

[39] Ibid., p. 17.
[40] Exhibit B-2, BCUC IR 3.1.
[41] Exhibit B-1, p. 17.
[42] Ibid., p. 19.
[43] Ibid., p. 17.
[44] Ibid., p. 20.
[45] Ibid.
[46] Ibid., p. 3.
[47] Exhibit B-2, BCUC IR 2.10.1.
[48] FBC Final Argument, p. 5.
[49] Ibid., p. 5.
[50] Ibid., pp. 6–7.

FBC states that although the GFT T1 transformer is not expected to fail "in the near term", its risk of failure is calculated to be 2.6 percent. This risk of failure is "on the high side", and FBC states that this should be no more than 2 percent.[51]

The CEC states that there is a "significant need" for the Project, given the lack of full redundancy and the poor condition of FBC's existing equipment. The CEC adds that it does not consider there to be "strong urgency" for the Project, given the remaining life expectancy and risk of failure of the GFT T1 transformer.[52]

The CEC argues that deferring the Project would save $12 million in capital expenditures but could also increase risks. The CEC notes that FBC has not quantitatively analyzed the trade-offs in making such a deferral.[53]

BCOAPO submits that FBC has adequately demonstrated that the current facilities do not provide sufficient redundancy in the Grand Forks area. It adds that it is satisfied with FBC's explanation as to why the Grand Forks area has been prioritized over other areas with similar lack of redundancy of supply.[54]

ICG submits that in its 2012-2013 Revenue Requirements application FBC confirmed that service to the Grand Forks area was a "radial load", and that according to the Mandatory Reliability Standard TPL-001-0.1, approved by the BCUC, supply to radial customers may be interrupted without affecting the overall reliability of the interconnected transmission systems.[55]

In reply, FBC submits the "single contingency (N-1) transmission system planning criteria apply in the Grand Forks area". FBC adds that this criterion is the standard in the electric utility industry for interconnected systems, and that GFT is part of the interconnected system. FBC disputes ICG's claim that a failure of the GFT T1 transformer will affect only the Grand Forks area and not the reliability of the interconnected transmission system.[56]

ICG argues that service to the Grand Forks area has never met the "single contingency (N-1) criteria" for reliability, and that FBC has failed to explain adequately why there is now a need to meet this standard.[57] ICG adds that a failure of the GFT T1 transformer would affect only the Grand Forks area and not the reliability of the interconnected transmission system.[58]

FBC responds that it has consistently viewed the single contingency transmission system planning criterion as applicable to the Grand Forks area. FBC adds that the evidence demonstrates the criterion has been applied for at least twenty years.[59] However, FBC points out that the Grand Forks area does not presently meet the criterion, and that it is not possible to partially satisfy the criterion.[60]

---

[51] FBC Final Argument, pp. 5–6.
[52] CEC Final Argument, p. 8.
[53] Ibid.
[54] BCOAPO Final Argument, p. 6.
[55] ICG Final Argument, pp. 3–4.
[56] FBC Reply Argument, p. 1
[57] ICG Final Argument, p. 3
[58] ICG Final Argument, p. 4.
[59] FBC Reply Argument, p. 3.
[60] Ibid., p. 4.

ICG further submits that FBC is forecasting increasing loads to justify the Project. However, ICG notes that the 2018 actual winter peak is lower than the 2011 actual winter peak. In addition, ICG states that the BCUC should not rely on the evidence of the 2018 winter peak load owing to discrepancies in figures provided by FBC, namely 31.22 MVA and 31.2 MW.[61]

ICG observes that the reliability of service in the Grand Forks area is only at risk during seasonal peaks, as the service meets the "single contingency planning criteria" outside those periods. ICG further submits that the average number of peak hours above 27 MW (the maximum amount of energy that lines 9L or 10L can supply alone) is not trending up.[62]

FBC replies that load growth is not a driver for the Project, as the GFT T1 transformer has sufficient capacity to serve the needs of the Grand Forks area over the system planning horizon of twenty years. Rather, the load growth is relevant as a factor in comparing the alternatives.[63]

ICG further submits that the Grand Forks area will meet the "single contingency criteria" for reliability until 2031, when demand load is forecast to reach 45 MW. ICG states that the number of hours that the seasonal peak loads exceed the backup supply limitation of line 9L (27 MW) has not exceeded 20 hours in any peak season in the last five years. Further, ICG notes that the risk of failure of the GFT T1 transformer is 2.6 percent, just higher than an acceptable risk of failure of 2 percent, and concludes that the reliability risk is limited, and should be acceptable.[64]

FBC disputes ICG's claim that the peak demand in the Grand Forks area "has not exceeded 20 hours in any peak season in the least five years." FBC submits that the figure is much larger, "approximately 400 hours or more" in the winter 2016–2017 season, as can be observed from the graphs in evidence.[65] FBC adds that the risk of load loss of twenty hours at a time should not be minimized, as this is not acceptable for many residential customers, particularly in winter.

Finally, ICG submits that in the event the BCUC concludes there is a need for the Project, the investment should be delayed because the load forecast evidence does not justify the Project.[66]

FBC responds that delaying the Project is unacceptable because of the lack of full redundancy in the system providing power to the Grand Forks area, and because the reliability risks already identified will worsen over time. FBC adds that it has maximized the value of its assets with appropriate maintenance and improvements, but that the condition of the 9L and 10L lines has continued to deteriorate and the GFT T1 transformer is approaching the end of its life.[67]

[61] ICG Final Argument, p. 5.
[62] Ibid., p. 6.
[63] FBC Reply Argument, p. 8.
[64] ICG Final Argument, pp. 6–7.
[65] FBC Reply Argument, p. 9.
[66] ICG Final Argument, p. 6.
[67] FBC Reply Argument, pp. 6–7.

Panel Determination

The Panel finds that FBC has established the need for the Project to improve reliability of its service in the Grand Forks area.

FBC has not argued that the Project is required to serve Grand Forks customers under normal circumstances, either to meet demand today or over its system planning horizon of twenty years. Rather, the Project addresses the possible failure of one critical component in their transmission system, the GFT T1 transformer, thus reducing the risk of service outages to customers in the Grand Forks area.

At present, in the event of a GFT T1 transformer outage or failure, backup supply for the Grand Forks area would be provided via transmission lines 9L and 10L, the individual capacity of which is 27 MW. The use of lines 9L and 10L to provide energy to the Grand Forks area requires reconfiguration by field personnel which takes "hours" to complete.

Transmission line 9L, which is in better condition that line 10L, can provide 27 MW of energy to the Grand Forks area. However, for periods when demand is greater than 27 MW, which FBC estimates to be at least 400 hours per year, FBC would not be able to serve its customers' full load without using line 10L in parallel to line 9L. Using lines 9L and 10L in parallel would provide a total of 45 MW. However, line 10L is not normally energized due to its poor condition, and if lines 9L and 10L could not be reconfigured to meet the total demand, this could result in "extended customer outages"[68].

FBC's other alternative at present is to install its spare, on-site transformer, OLI T1, which would take 3–4 weeks. This assumes that OLI T1 is not in use elsewhere, as it is also the designated spare transformer for two other stations.

In the event of a failure of the GFT T1 transformer, it would "likely take more than a year" to replace it.[69]

The Panel finds that the situation described above does not provide a sufficient degree of reliability for customers in the Grand Forks area. Any unplanned outage of the GFT T1 transformer would involve loss of power for hours, and in times of peak demand it is not certain power can be restored without installing the OLI T1 transformer, which would take 3–4 weeks, if it is not in use elsewhere.

The CEC and BCOAPO both agree with FBC that there is a need for the Project to improve reliability in the Grand Forks area. However, ICG does not agree. The Panel addresses ICG's points below.

ICG submits that the Grand Forks area has never met the "single contingency (N-1) criteria", and that FBC has failed to explain why it must now meet this standard. The Panel does not find this argument persuasive. For the reasons set out above, the Panel is persuaded that the Project is needed now to improve reliability.

ICG argues that reliability of service in the Grand Forks area is only at risk in periods of peak demand. The Panel agrees that the time required to restore service in peak periods is longer than in non-peak periods. However, even in non-peak periods the time to restore power by energizing line 9L to GFT is at least hours, and in winter

[68] Exhibit B-1, p. 20.
[69] Ibid.

may be significantly longer. The Panel disagrees that there is no risk to reliability in non-peak periods, as the evidence demonstrates the risk of outages of "hours" in the event that the GFT T1 transformer is taken out of service.

Finally, ICG submits that in the event the BCUC establishes the need for the Project, the Project should be delayed, as the load forecast evidence does not justify the investment. The Panel does not find the load forecast to be relevant in justifying the need for the Project. The current transmission facilities adequately serve the area's load now and for the next twenty years, and FBC has not justified the Project based on load growth, but on the risks to the reliability of its service. The Panel has already found that the Project is needed now and is not persuaded that there is a reason to delay the investment.

3.2 Project Alternatives

Evaluation Criteria

FBC sets out a number of technical and financial criteria used in comparing the Project against Alternatives A and C.[70] In comparing the Project against alternatives, key differences, as identified through technical and financial criteria, as well as through the IR process, are discussed below.

Remote Switching

The three alternatives present two ways to provide backup power to the Grand Forks area – a two-transformer setup at GFT (Project and Alternative A) versus a single transformer at GFT T1 and fully rehabilitated lines 9L and 10L (Alternative C).

A two-transformer setup provides FBC the ability to transfer load remotely between GFT T1 and GFT T2, which is advantageous in the event of an outage to GFT T1. With a single transformer at GFT, field staff would be required to manually close switches on lines 9L and 10L in the event of an outage to GFT T1.

On-Site Spare OLI T1

As stated in section 3.1 above, maintaining OLI T1 as an on-site spare provides benefits to FBC outside the scope of this Application, as it also serves as an emergency spare for two other stations in the FBC system.

Transformer Replacement Strategies

The following figure graphically illustrates transformer replacement strategies as a means of visually comparing the alternatives.

[70] Exhibit B-1, pp. 24–26

Figure 5 – Transformer Replacement Strategies[71]

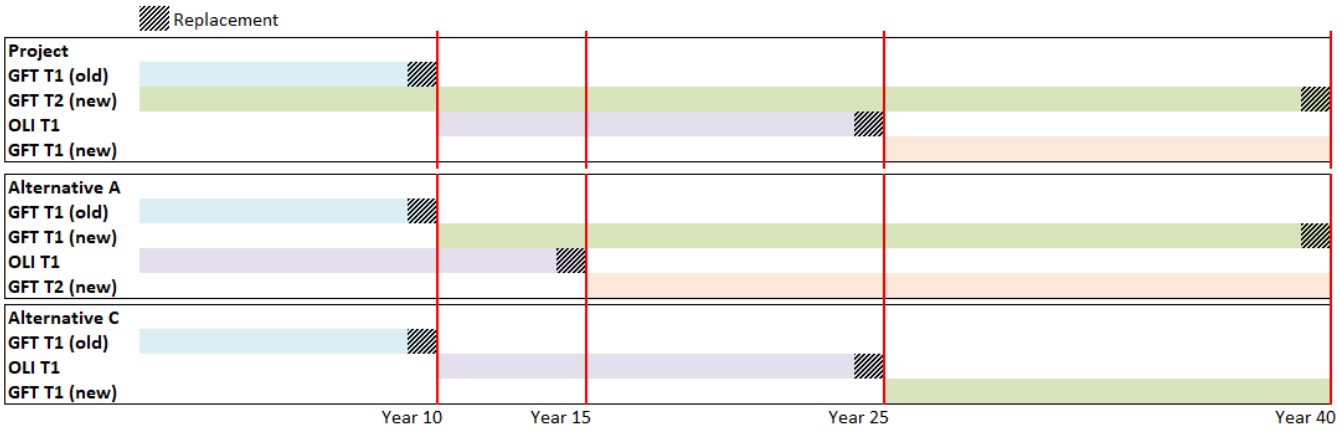

Both the Project and Alternative A use a two-transformer configuration, while Alternative C maintains the use of a single transformer at GFT, with 9L and 10L serving as an alternate source of supply.

Levelized Rate Impact

While the Project is scheduled to take two years to complete, FBC estimated the rate impact of the Project over a 40-year evaluation period, which represents the expected lifespan of the new transformer. Under this methodology, FBC expects to match expected benefits of increased reliability in the Grand Forks area against the total of capital costs of the Project and incremental operating costs. In this manner, financial criteria used in comparing the Project against alternatives included i) the Project capital cost estimate, ii) incremental cost of service requirements, including the rate impact as a percentage of the 2018 Revenue Requirement and iii) the levelized rate impact over a 40-year period. Assumptions used by FBC to evaluate the Project over a 40-year cost of service period, include inflation rates, load growth and future expected capital costs of transformer replacements.[72]

The 40-Year present value (PV) cost of service and levelized rate impact of each Alternative are shown below.

Figure 6 – Levelized Rate Impact (Base Values)[73]

	40-Year PV cost of service ($2018)	Levelized rate impact (%)	Levelized rate impact ($)
Project	$9.960M	0.18%	$0.0020/KWh
Alternative A	$9.959M	0.18%	$0.0020/KWh
Alternative C	$14.004M	0.26%	$0.0028/KWh

A more thorough discussion on capital costs is provided in section 3.7 below.

[71] Figure 5 visually represents future capital requirements as described on page 24 of Exhibit B-1.
[72] Exhibit B-1, pp. 41–42.
[73] Figure 6 summarizes information from Table 3-3 on page 26 of Exhibit B-1.

Positions of the Parties

FBC submits that it examined three alternatives to meet the need for additional reliability in the Grand Forks area (Alternative A, the proposed Project [also referred to as Preferred Alternative B] and Alternative C). FBC also considered consolidating lines 9L and 10L into a single circuit but rejected this because of the larger voltage drop in the Grand Forks area compared to using lines 9L and 10L in parallel. FBC did not consider the status quo as an option.[74]

FBC argues that the proposed Project is the best option when considering the technical and financial evaluation criteria.[75] All three alternatives meet FBC's criterion of improving reliability in the event of an outage of the GFT T1 transformer. However, FBC explains that the proposed Project offers increased reliability as it includes the purchase of a new transformer with a useful remaining life of at least 40 years, and leaves the OLI T1 transformer available as an on-site spare for GFT and other nearby substations.[76] In its financial analysis, FBC concludes that Alternative A and the proposed Project both have similar financial impact that is less than Alternative C based on the present value of incremental cost of service.[77]

The CEC submits that FBC's technical and financial evaluation criteria are reasonable. The CEC agrees with FBC that the proposed Project represents the preferred solution, and that the purchase of the new transformer has the potential to add significant value beyond its estimated 40-year life expectancy.[78] [79] However, the CEC adds that it would have been reasonable for FBC to provide a quantification of the risk reduction of the alternatives, and that the BCUC would have benefitted from a quantitative assessment of the value of short-term deferrals.[80]

FBC replies that it appropriately identified risks and performed a comparative analysis of the relative risks between the three alternatives. It adds that it filed evidence quantifying the cost impact (in $) and schedule risk (in days) associated with various identified risks.[81]

BCOAPO submits that FBC has identified and assessed the feasible options for improving reliability in the Grand Forks area and concurs that the proposed Project is the appropriate alternative.[82] BCOAPO adds that, unlike alternatives A and the Project, Alternative C will not satisfy the load growth anticipated in the Grand Forks area in the next twenty years.[83]

ICG submits that FBC should have considered, as an alternative, retaining the status quo for the next five years. It adds that a load management program could be implemented to reduce reliability risk in that period.[84]

FBC replies that the Project should not be deferred for five years or more, as suggested by ICG and not objected to by CEC. FBC argues that there are significant reliability concerns in the Grand Forks area now, and that the

[74] FBC Final Argument, p. 7–8.
[75] Ibid., p. 8.
[76] Ibid., pp 9–12.
[77] Ibid., pp. 13–14.
[78] CEC Final Argument, pp. 8-9.
[79] Ibid., p. 11.
[80] Ibid., pp. 9, 11.
[81] FBC Reply Argument, p. 7.
[82] BCOAPO Final Argument, p. 9.
[83] Ibid., p. 8.
[84] ICG Final Argument, p. 6.

poor condition of existing facilities may result in extended outages during peak load conditions. FBC notes that CEC acknowledges that deferral of the Project would increase risks. [85]

FBC also submits that load management would not address the reliability risks in the Grand Forks area. It observes demand-side management cannot address the reliability issues because the amount of load reduction required is too substantial. Further, load curtailment, the other load management approach, is a temporary emergency measure and not appropriate to use for system planning. FBC adds that ICG has submitted no evidence that load management would reduce reliability risk.[86]

Finally, FBC submits that Alternative C will not satisfy the load growth anticipated for the Grand Forks area in the next twenty years, whereas alternatives A and the proposed Project are capable of meeting the load in that timeframe.[87]

Panel Determination

The Panel is satisfied that the three alternatives identified and evaluated by FBC are appropriate. The only alternative identified but not evaluated by FBC, and which is supported by ICG, is that of maintaining the status quo for five years or more. The Panel agrees with FBC that the status quo is not a suitable alternative, as the reliability risks are present now, and will increase as the facilities deteriorate with time.

The Panel is also satisfied with the evaluation criteria used by FBC to evaluate the three alternatives, noting that none of the interveners have challenged them or suggested other criteria in their place.

All three alternatives meet the need to improve reliability in the Grand Forks area. The choice between them turns on their evaluation against technical and financial criteria. Alternative C has the largest financial impact on the basis of the present value of incremental cost of service and yet has no reliability or operational benefits over the other two alternatives and fails to meet the load growth anticipated in the Grand Forks area in the next twenty years, so is inferior to both other alternatives. Alternatives A and the proposed Project have similar financial impacts, but the proposed Project provides improved reliability benefits over Alternative A, both for the Grand Forks area and by leaving the OLI T1 transformer as a spare for the two other FBC stations for which it is currently the only designated emergency spare. For these reasons, **the Panel finds that the Project is the most appropriate alternative to meet the reliability needs in the Grand Forks area.**

3.3 Project Risks

Risks which could delay or increase the cost of the Project are:[88]

- Unforeseen environmental or archaeological discoveries during the construction phase. The risk of such occurrences is considered to be low, based on FBC's experience in the GFT and along the 9L and 10L right-of-way.

[85] FBC Reply Argument, pp. 5–6.
[86] Ibid., pp. 9–10.
[87] Ibid., p. 8.
[88] Exhibit B-1, pp. 36–37.

- Narrow construction work windows for environmental impact mitigation and for transmission equipment outages leading to delays and increased costs. Extensive effort in the planning and scheduling of work will be used to reduce this risk along with the provision of schedule buffers to mitigate impacts.
- Wildfire risk along the 9L and 10L corridor may impact FBC's ability to complete work from late Spring to early Fall.
- Shortage of qualified contractors and/or equipment and materials. FBC considers the likelihood of this risk to be low based on the following:
    - Contract Labour – FBC has several substation and power line contractors on its pre-approved contractors list. There are no indications that these resources will be unavailable due to increased labour demand elsewhere in Western Canada.
    - Equipment/Materials – FBC has agreements in place for all major equipment, with the exception of the new GFT T2 transformer. As a result, FBC has certainty with respect to lead times and pricing for major equipment, although some equipment pricing may be subject to CAD/USD foreign exchange rate volatility. Materials are likely to be impacted by world commodity prices, however FBC does not believe this will be a major impact because FBC has purchasing contracts in place for standardized equipment items for purchases of equipment other than the new transformer (GFT T2).

There are approximately 15 potential properties where land rights for distribution right of ways may be required, considering that 9L and 10L were originally constructed in 1908 and that the form of statutory right of way used by FBC has changed over time.[89]

In confidential responses to BCUC IRs, FBC provided the risk register for the Project, listing the risks with their estimated likelihood, impact, preventative actions and contingency actions.[90]

Positions of the Parties

FBC submits the overall schedule risk for all three alternatives is low. The schedule risk for the proposed Project is low because FBC has agreements in place with approved vendors and lead times for delivery of the new GFT T2 transformer have already been established.[91] FBC adds that the schedule risk for Alternative A is the lowest because the OLI T1 transformer is already onsite, and that Alternative C has the highest risk of being impacted by seasonal construction windows.[92]

FBC argues that the lands risk is lowest with Alternative C since the distribution and transmission routes would not change, while alternatives A and the proposed Project both require distribution rights of way to be confirmed for portions of lines 9L and 10L.[93] FBC considers the lands risk of the proposed Project to be low, as only 15 properties have been identified as potentially requiring land rights for distribution right of way.[94]

[89] Exhibit B-10, BCOAPO IR 19.1
[90] Exhibit B-2-2, BCUC IR 9.1
[91] FBC Final Argument, p. 12.
[92] Ibid., p. 11.
[93] Ibid., p. 11.
[94] Ibid., p. 12.

All alternatives have unforeseen environmental and archeological discovery risk during construction based on FBC's historical experience along the rights of way.[95]

The CEC is satisfied with FBC's assessment and analysis of the Project risks, including FBC's approach to land rights.[96] Neither BCOAPO nor ICG comment specifically on risks associated with the Project.

Panel Determination

The Panel finds that the Project risk analysis conducted by FBC is adequate. FBC has identified schedule, land, environmental and archeological discovery risks, and provided a satisfactory analysis of their likelihood, impact, preventative actions and contingency actions. FBC has not identified any risks as having a high likelihood.

3.4 Consultation

Indigenous Consultation

FBC states that it has not heard of any concerns from the public regarding transmission lines 9L and 10L. Instead, FBC focused on its consultation of the transmission line component of the Project with Indigenous communities, specifically the effects of removing and salvaging portions of 9L and 10L, as well as repurposing portions of the line for distribution purposes on cultural lands.[97] While proposed work related to 9L and 10L will take place on the existing rights of way,[98] FBC used the Province of BC's Consultative Areas Database (CAD) to identify those Indigenous communities with territories along the 9L and 10L route where Project work would be completed.[99]

Initial notification and follow-up letters were distributed to all Indigenous communities identified through the CAD on July 13, 2018 and November 22, 2018, respectively, and outlined the type of work, proposed areas of pole replacements and contact information for any queries. Outside of correspondence with the Osoyoos Indian Band (OIB), FBC has not received any feedback from Indigenous communities.[100]

The OIB began dialogue with FBC on July 4, 2018 to discuss the impact of pole replacements set out in the Project, particularly the location of where the poles would be set on their cultural lands. Through these discussions, the OIB agreed with FBC's commitment to fund monitors during ground disturbance should any culturally sensitive sites be identified, and to provide Shapefiles and Keyhole Markup language Zipped (KMZ) files of the transmission component of the Project once the exact poles to be replaced were identified. FBC provided KMZ files via email July 10, 2018 and states that they will continue to work with OIB as well as other Indigenous communities during project planning and construction.[101]

[95] FBC Final Argument, p. 11.
[96] CEC Final Argument, p. 13.
[97] Exhibit B-1, p. 30.
[98] Exhibit B-2, BCUC IR 6.1
[99] Exhibit B-1, p. 30.
[100] Ibid., p. 31, Exhibit B-2, BCUC IR 5.2, BCUC IR 5.4
[101] Exhibit B-1, p. 31.

Public Consultation

Grand Forks Terminal is located in a rural/farming area on the outskirts of Grand Forks, within 250 metres of the Copper Ridge subdivision. The map provided below identifies the most likely transportation route to be used to move materials and equipment to the construction site.

Figure 7 – Grand Forks Terminal Location and Transportation Route[102]

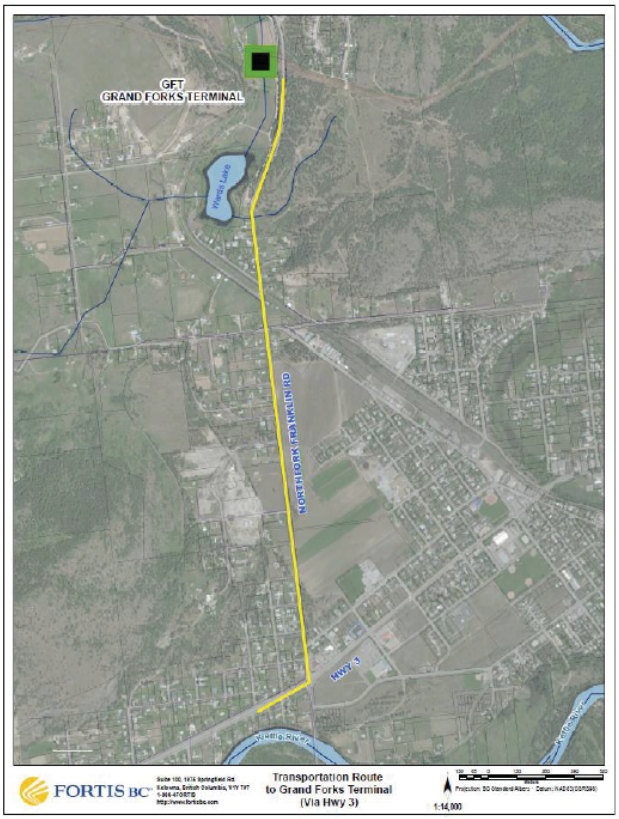

FBC views that traffic along the transportation route may increase due to increased civil and electrical contractors commuting to the site, along with excavators, dump truck vehicles and equipment deliveries over the course of the Project.[103] FBC states that Project work will take place within the existing substation and that no federal, provincial or municipal approvals, permits, licenses or authorizations are required. As a result, FBC views that a broad public consultation is not required to complete this Project.[104]

Historically, noise and light levels at the Grand Forks substation have been a point of contention with residents of the Copper Ridge subdivision. In letter L-19-04 dated March 31, 2004, the BCUC accepted conclusions of a study on noise levels at the Grand Forks substation at that time and determined that in comparison with environmental standards for noise in other jurisdictions, the noise levels are not excessive, and that transformer noise levels meet industry practices according to CSA standards. The letter also encouraged a collaborative approach to addressing noise issues.[105]

[102] Exhibit B-2, BCUC IR 6.2
[103] Ibid., BCUC IR 6.3.1
[104] Ibid., BCUC IR 6.1
[105] L-19-04 dated March 31, 2004

Letters of comment indicated that additional noise and increased lighting coincident with construction and operations of a second transformer would result in negative effects on the physical and emotional health of residents, as well as decreased property values.[106] FBC responded to this feedback by sending letters to 41 addresses located within 250 metres of the Grand Forks Terminal substation, providing assurances that lighting levels would not increase, and that a sound barrier would be installed to minimize noise impacts to the community, along with contact information for any follow questions or information required.[107] FBC also addressed concerns communicated through letters of comment through the following response:[108]

- An engineered sound wall will be constructed around the second transformer, similar to what was built around the existing transformer. This is expected to absorb and re-direct any sound away from the Copper Ridge residential area.
- Lighting levels as a result of installing the new transformer will remain the same, and additional lights installed during construction will only be turned on during emergencies or cases where evening work is required.
- Given the substation footprint and lighting levels will remain the same once construction is complete, and given noise concerns will be mitigated, the Project is not expected to reduce property values.

Positions of the Parties

FBC submits it has adequately engaged and consulted Indigenous communities and other stakeholders, and that it will continue its engagement and will address issues that may arise. FBC adds that it will contact directly those residents and community businesses that experience impact during the Project construction.[109]

FBC further submits that it has adequately mitigated the noise and light concerns that have been raised by local residents and has begun contacting residents to discuss their concerns.[110]

The CEC submits that FBC's approach to consultation is acceptable.[111] Neither BCOAPO nor ICG comment specifically on FBC's consultation associated with the Project.

Panel Determination

FBC has identified and contacted the Indigenous communities potentially affected by the Project. FBC has also met with one such community, the OIB, and agreed to provide information requested. For these reasons, **the Panel finds that FBC's consultation to date with Indigenous communities is satisfactory**.

In its Application, FBC submitted that no public consultation was required, as the substation is located in an industrial park. FBC subsequently corrected this statement, submitting that the substation is in a "rural/farming area on the outskirts of Grand Forks", and added that it would directly contact residents and commercial

[106] Exhibits E-1 to E-6, Exhibit D-1-1
[107] Exhibit B-9, BCUC IR 22.3, BCUC IR 22.3.1
[108] Exhibit B-2, BCUC IR 6.1
[109] FBC Final Argument, p. 2.
[110] Ibid., p. 2.
[111] CEC Final Argument, p. 13.

businesses who would experience limited impact during construction. FBC still submits that no broader public consultation is required.[112]

The Panel finds that FBC's consultation with the public in the area of the Grand Forks substation was not sufficient. In addition to contacting those residents and commercial businesses directly impacted by the construction, FBC should have consulted with residents living close to the substation regarding possible impacts once construction of the Project is complete. The evidence of the seven letters of comment received by the BCUC demonstrates that there is some level of public concern about the possibility of increased noise and light pollution as a result of adding a second transformer to the site.

That said, **the Panel is satisfied that FBC has now adequately mitigated the concerns raised in the letters of comment**. The engineered sound wall that FBC will install around the new transformer is similar to that surrounding the existing transformer, which the BCUC has previously found to be satisfactory. Further, FBC has committed to minimizing any additional evening light during construction and submits that there will be no change to the footprint or lighting levels at the site after construction is complete.

3.5 Long-Term Resource Plan

FBC addresses the requirement under the UCA for the BCUC to consider FBC's long-term resource plan as follows:[113]

> Under section 46(3.1)(b), the BCUC must consider the most recent long-term resource plan filed by the public utility. As was discussed in section 6.3 of the 2016 Long Term Electric Resource Plan Application, the Project (which was described at the time as the Grand Forks Terminal Transformer Addition) was originally proposed in FBC's 2012 Long Term Capital Plan and identified in the most recent long-term resource plan, as being a transmission reinforcement project to be completed some time in 2018-2020

Panel Determination

The Panel finds that the Project is consistent with FBC's most recently filed long-term resource plan.

3.6 *Clean Energy Act* and BC's Energy Objectives

FBC addresses the requirement under the UCA for the BCUC to consider the applicable BC Energy Objectives as follows:[114]

> With respect to section 46(3.1)(a), British Columbia's energy objectives are provided in the Clean Energy Act (CEA). The Company [FBC] was mindful of these energy objectives when

[112] Exhibit B-2, BCUC IR 6.1
[113] Exhibit B-1, p. 45.
[114] Ibid., pp. 44–45.

designing the Project and the following of British Columbia's energy objectives were identified as being applicable to the present Application, as defined in section 2 of the CEA:

> (a) to achieve electricity self-sufficiency;
> (c) to generate at least 93% of the electricity in British Columbia from clean or renewable resources and to build the infrastructure necessary to transmit that electricity;
> (d) to use and foster the development in British Columbia of innovative technologies that support energy conservation and efficiency and the use of clean or renewable resources; and
> (k) to encourage economic development and the creation and retention of jobs.

In particular, the GFT Reliability Project will ensure reliable 63kV power delivery to residential, commercial, and industrial customers in the Grand Forks area.

Panel Determination

The Panel finds that the Project is consistent with BC's Energy Objectives (a), (c), (d) and (k), and does not conflict with any other of BC's Energy Objectives.

3.7 Capital Costs

The estimated total cost of the Project is $13.171 million, which includes AFUDC and the cost of removal of a portion of transmission lines 9L and 10L and repurposing the remainder. The capital cost meets the AACE class 3 level of project definition and design, and hence has an expected accuracy of between -10 and +30 percent.[115]

Figure 8 – Summary of Estimated Project Capital Costs ($000)[116]

Particular	2018 $	As–spent $
Pre-Approval Costs	257	257
Construction	6,414	6,630
Contingency	1,184	1,225
AFUDC		400
Subtotal – Construction	**7,855**	**8,512**
Net Removal Costs	3,475	3,625
Contingency	866	903
AFUDC		131
Subtotal – Net Removal	**4,341**	**4,659**
Total Project	**12,196**	**13,171**

In developing its capital cost estimate, two of the key assumptions employed by FBC included: 1) determining the amount of work to be completed by internal and external resources and 2) keeping the existing grounding grid the same.[117] Within this framework, capital cost estimates for each of the substation and transmission line components of the Project were submitted confidentially through Appendix H and Appendix C, respectively.

[115] Exhibit B-1, p. 39.
[116] Ibid., Table 6-1, pp. 39–40.
[117] Exhibit B-1, p. 40.

Total costs have been segregated into the sections below, with further capital cost summaries that reflect the purchase and installation of GFT T2, and the removal and repurposing of transmission lines 9L and 10L.

Figure 9 – Stations Capital Cost Summary ($000)[118]

Particular	2018 $	As–spent $
Pre-Approval Costs	170	170
Construction	4,277	4,401
Contingency	757	779
AFUDC		310
Subtotal – Construction	**5,203**	**5,660**
Net Removal Costs	46	47
Contingency	9	9
AFUDC		3
Subtotal – Net Removal	**55**	**59**
Total Stations Cost	**5,258**	**5,719**

Figure 10 – Transmission and Distribution Capital Cost Summary ($000)[119]

Particular	2018 $	As–spent $
Pre-Approval Costs	87	87
Construction	2,137	2,229
Contingency	427	446
AFUDC		90
Subtotal – Construction	**2,652**	**2,852**
Net Removal Costs	3,429	3,578
Contingency	857	894
AFUDC		128
Subtotal – Net Removal	**4,286**	**4,600**
Total T&D Costs	**6,938**	**7,452**

During the IR Process, the 40-year PV cost of service was stress tested using the accuracy range associated with AACE Class 3 estimates (-10/+30 percent). In this manner, such testing identified the potential variability of rate impacts should estimated capital costs, or incremental operating costs used in estimating the 40-year PV cost of service be evaluated for reasonableness. Figures 11 and 12 below reflect the change in PV for the Project and Alternatives A and C.[120]

Figure 11 – Change in Value of 40-Year Cost of Service ($2018)

		PV Value if:		Difference to Base PV if:	
	Base PV	Project Costs Decline 10%	Project Costs Increase 30%	Project Costs Decline 10%	Project Costs Increase 30%
Alternative A	$9.959M	$8.824M	$13.362M	($1.135)M	$3.403M
Alternative B	$9.960M	$8.709M	$13.716M	($1.251)M	$3.756M
Alternative C	$14.004M	$12.988M	$17.050M	($1.016)M	$3.046M

[118] Exhibit B-1, Table 6-2, pp. 40–41.
[119] Ibid., Table 6-3, p. 41.
[120] Exhibit B-2, BCUC IR 14.1, 14.2.

Figure 12 – Levelized Rate Impact

		% Rate Impact if:		Change in Annual Bill if:	
	Base PV	Project Costs Decline 10%	Project Costs Increase 30%	Project Costs Decline 10%	Project Costs Increase 30%
Alternative A	$9.959M	0.16%	0.24%	$2.05	$3.11
Alternative B	$9.960M	0.16%	0.25%	$2.03	$3.19
Alternative C	$14.004M	0.24%	0.31%	$3.02	$3.97

Positions of the Parties

The CEC is satisfied with the costing of the Project, including the calculation of cost contingencies.[121]

ICG argues that the PV of cost of service evidence provided by FBC should not be accepted by the BCUC. ICG explains this is because FBC's financial model reduces the PV of the cost of service for alternatives A and the proposed Project, but does not reduce the PV of the cost of service for Alternative C. ICG submits it is reasonable to assume that the investments in lines 9L and 10L would result in O&M reductions under Alternative C. [122]

FBC disputes ICG's argument because ICG has not provided evidence to support its assumption. FBC submits that while Alternative C has the lowest capital cost of the three alternatives, it requires the same level of O&M spending that is being incurred today. Therefore, the capital investment in Alternative C would not have any incremental effect on O&M, so none was included in the cost of service calculation. By contrast, Alternative A and the proposed Project both result in an incremental reduction in O&M spending as a result of portions of lines 9L and 10L being removed, and this reduction was included in the cost of service calculation.[123]

Panel Determination

The Panel finds that the capital cost of the Project is satisfactory. FBC has estimated the Project on a basis consistent with the CPCN Guidelines, and the overall financial effect of the Project on ratepayers, including both capital costs and changes in operating costs, is reasonable.

The Panel rejects ICG's argument that the PV of the cost of service for Alternative C should be reduced. The Panel is persuaded by FBC's argument that the refurbished lines 9L and 10L will still require brushing and annual patrols, despite their rehabilitation.

4.0 CPCN Determination

The Panel finds that public convenience and necessity require that the Project proceed.

The Panel has found that there is a need to improve the reliability of electricity supply in the Grand Forks area, that Alternative B proposed by FBC is the best available alternative, and that the capital cost of the Project is reasonable.

[121] CEC Final Argument, p. 13.
[122] ICG Final Argument, pp. 7–8.
[123] FBC Reply Argument, p. 13.

While the Panel is not satisfied that FBC's public consultation was satisfactory, FBC's subsequent actions have addressed the deficiency, and mitigated adequately the concerns raised by the public in letters of comment to the BCUC.

Accordingly, the Panel grants a CPCN to FBC for:

- **Installation of a second transformer at Grand Forks Terminal Station (GFT) by purchasing a new 161/63kV transformer as described in the Application;**
- **Removal of 44.6 km of the 65.4 km of transmission lines 9 Line (9L) and 10 Line (10L) from Christina Lake substation (CHR) to Cascade substation (CSC); and**
- **Repurposing of the remaining 20.8 km of transmission lines 9L and 10L to distribution lines to continue to supply power to customers.**

5.0 Reporting Requirements

FBC is directed to:

1. file a report within three months of the completion of the installation and procurement of a second transformer at GFT. The report is to include the final cost of the transformer, a complete breakdown of the final costs of installation, a comparison of these costs to the estimates provided in this Application, and an explanation of all material cost variances;
2. file a report within three months of the completion of the removal of a portion of transmission lines 9L and 10L and re-purposing the remaining portions of transmission lines 9L and 10L. The report is to include a complete breakdown of the final costs of such removal and re-purposing, a comparison of these costs to the estimates provided in this Application, and an explanation of all material cost variances; and
3. consult with BCUC staff on the form of these reports.

DATED at the City of Vancouver, in the Province of British Columbia, this 25th day of July 2019.

Original signed by:

R. I. Mason
Panel Chair

Original signed by:

W. M. Everett, QC
Commissioner

Original signed by:

B. A. Magnan
Commissioner

bcuc
British Columbia
Utilities Commission

Suite 410, 900 Howe Street
Vancouver, BC Canada V6Z 2N3
bcuc.com

P: 604.660.4700
TF: 1.800.663.1385
F: 604.660.1102

ORDER NUMBER
C-2-19

IN THE MATTER OF
the *Utilities Commission Act*, RSBC 1996, Chapter 473

and

FortisBC Inc.
Application for a Certificate of Public Convenience and Necessity
for the Grand Forks Terminal Station Reliability Project

BEFORE:
R. I. Mason, Panel Chair
W. M. Everett, QC, Commissioner
B. A. Magnan, Commissioner

on July 25, 2019

ORDER

WHEREAS:

A. On November 19, 2018, FortisBC Inc. (FBC) submitted an application to the British Columbia Utilities Commission (BCUC) seeking approval for a Certificate of Public Convenience and Necessity (CPCN), pursuant to sections 45 and 46 of the *Utilities Commission Act* (UCA), for the Grand Forks Terminal (GFT) Station Reliability Project (Application);

B. The Application consists of the following (collectively, the Project):

    1. Purchase and installation of a second transformer at GFT Station;
    2. Removal of 44.6km of transmission lines "9 line" (9L) and "10 line" (10L) between the Christina Lake and Cascade substations; and
    3. Repurposing of the remaining 20.8km of transmission lines 9L and 10L to distribution lines in order to continue supplying power to customers;

C. By Orders G-250-18, G-43-19 and G-68-19 and G77-19, the BCUC established and subsequently amended the regulatory timetable to review the Application. The timetable included intervener registration and two rounds of information requests (IR), followed by submissions of final and reply arguments;

D. FBC and Intervener final arguments were received April 23, 2019 and May 7, 2019, respectively. FBC submitted its reply argument on May 21, 2019; and

E. The BCUC has considered the Application, evidence and submissions from all parties and finds that public convenience and necessity require that the Project proceed and the following determinations to be warranted.

NOW THEREFORE the BCUC orders as follows:

1. Pursuant to sections 45 and 46 of the UCA, a CPCN is granted to FBC authorizing the following:
    a. the purchase and installation of a second transformer at GFT Station;
    b. the removal of 44.6km of transmission lines 9L and 10L between the Christina Lake and Cascade substations, and
    c. the repurposing of the remaining 20.8km of transmission lines 9L and 10L to distribution lines in order to continue supplying power to customers.
2. FBC is directed to:
    a. file a report within three months of the completion of the installation and procurement of a second transformer at GFT. The report is to include the final cost of the transformer, a complete breakdown of the final costs of installation, a comparison of these costs to the estimates provided in this Application, and an explanation of all material cost variances;
    b. file a report within three months of the completion of the removal of a portion of transmission lines 9L and 10L and re-purposing the remaining portions of transmission lines 9L and 10L. The report is to include a complete breakdown of the final costs of such removal and re-purposing, a comparison of these costs to the estimates provided in this Application, and an explanation of all material cost variances; and
    c. consult with BCUC staff on the form of these reports.

DATED at the City of Vancouver, in the Province of British Columbia, this 25th day of July 2019.

BY ORDER

Original signed by:

R. I. Mason
Commissioner

IN THE MATTER OF
the *Utilities Commission Act*, RSBC 1996, Chapter 473

and

FortisBC Inc.
Certificate of Public Convenience and Necessity
Application for the Grand Forks Terminal Station Reliability Project

EXHIBIT LIST

Exhibit No.	Description
COMMISSION DOCUMENTS	
A-1	Letter dated December 21, 2018 – Appointing the Panel for the review of FortisBC Inc. Certificate of Public Convenience and Necessity Application for the Grand Forks Terminal Station Reliability Project
A-2	Letter dated December 21, 2018 – BCUC Order G-250-18 establishing a regulatory timetable and public notice
A-3	Letter dated January 24, 2019 – BCUC Information Request No. 1 to FBC
A-3-1	**CONFIDENTIAL** - Letter dated January 24, 2019 – Confidential BCUC Information Request No. 1 to FBC
A-4	Letter dated February 28, 2019 – BCUC Order G-43-19 furthering the regulatory timetable with reasons
A-5	Letter dated March 7, 2019 – BCUC Information Request No. 2 to FBC
A-5-1	**CONFIDENTIAL** - Letter dated March 7, 2019 – BCUC Confidential Information Request No. 2 to FBC
A-6	Letter dated March 25, 2019 – BCUC Order G-68-19 amending the regulatory timetable
A-7	Letter dated March 29, 2019 – BCUC Request to registered interveners for comments on further process
A-8	Letter dated April 9, 2019 – BCUC Order G-77-19 furthering the regulatory timetable with reasons

B-1	**FORTISBC INC. (FBC)** Letter dated November 19, 2018 – Certificate of Public Convenience and Necessity (CPCN) Application for the Grand Forks Terminal Station Reliability Project
B-1-1	**CONFIDENTIAL** - Letter dated November 19, 2018 – FBC Submitting Confidential Appendices to the Application
B-1-1-1	**CONFIDENTIAL** - Letter dated February 14, 2019 – FBC Submitting Errata to Confidential Appendices to the Application
B-1-2	Letter dated February 14, 2019 – FBC Submitting Errata to the Application
B-2	Letter dated February 14, 2019 – FBC Submitting Responses to BCUC Information Request No. 1
B-2-1	**CONFIDENTIAL** - Letter dated February 14, 2019 – FBC Submitting Responses to BCUC Confidential Information Request No. 1
B-2-2	**CONFIDENTIAL** - Letter dated February 14, 2019 – FBC Submitting Confidential Attachment 9.1 to BCUC Information Request No. 1
B-3	Letter dated February 14, 2019 – FBC Submitting Confidential Responses to BCMEU Information Request No. 1
B-4	Letter dated February 14, 2019 – FBC Submitting Responses to BCOAPO Information Request No. 1
B-4-1	**CONFIDENTIAL** - Letter dated February 14, 2019 – FBC Submitting Confidential Responses to BCOAPO Information Request No. 1
B-5	Letter dated February 14, 2019 – FBC Submitting Responses to CEC Information Request No. 1
B-5-1	**CONFIDENTIAL** - Letter dated February 14, 2019 – FBC Submitting Confidential Responses to CEC Information Request No. 1

B-5-2	**CONFIDENTIAL** - Letter dated February 14, 2019 – FBC Submitting Confidential Responses to CEC Confidential Information Request No. 1
B-5-3	**CONFIDENTIAL** - Letter dated February 19, 2019 – FBC Submitting Confidential Attachment 19.1 to CEC Information Request No. 1
B-6	Letter dated February 14, 2019 – FBC Submitting Responses to ICG Information Request No. 1
B-6-1	**CONFIDENTIAL** - Letter dated February 14, 2019 – FBC Submitting Confidential Responses to ICG Information Request No. 1
B-6-2	**CONFIDENTIAL** - Letter dated February 14, 2019 – FBC Submitting Confidential Responses to ICG Confidential Information Request No. 1
B-7	Letter dated February 14, 2019 – FBC Submitting Responses to Wait Information Request No. 1
B-8	Letter dated February 25, 2019 – FBC Submitting comments on further process
B-9	Letter dated March 21, 2019 – FBC Submitting Responses to BCUC IR No. 2
B-9-1	**CONFIDENTIAL** - Letter dated March 21, 2019 – FBC Submitting Responses to BCUC Confidential IR No. 2 and Extension Request for Confidential IR 2.9.2 Response
B-9-2	**CONFIDENTIAL** - Letter dated March 21, 2019 – FBC Submitting Confidential Response to BCUC IR 2.19.1
B-9-3	**CONFIDENTIAL** - Letter dated March 29, 2019 – FBC Submitting Confidential Response to BCUC IR 2.19.2
B-10	Letter dated March 21, 2019 – FBC Submitting Responses to BCOAPO IR No. 2
B-11	Letter dated March 21, 2019 – FBC Submitting Responses to CEC IR No. 2
B-11-1	**CONFIDENTIAL** - Letter dated March 21, 2019 – FBC Submitting Responses to CEC Confidential IR No. 2
B-12	Letter dated March 21, 2019 – FBC Submitting Responses to ICG IR No. 2
B-12-1	**CONFIDENTIAL** - Letter dated March 21, 2019 – FBC Submitting Responses to ICG Confidential IR No. 2
B-13	Letter dated March 27, 2019 – FBC Submitting Responses to ICG IR Requests
B-13-1	Letter dated March 27, 2019 – FBC Submitting Response to ICG IR Request to Refile IR 2.14.1 Graphs
B-14	Letter dated April 2, 2019 – FBC Submitting comments on further process

C1-1	**WAIT, ALAN (WAIT) –** Letter dated December 27, 2018 – Request for Intervener Status
C1-2	Letter dated January 31, 2019 – Wait Submitting Information Request No. 1 to FBC
C2-1	**GABANA, NORMAN (GABANA) –** Letter dated January 14, 2019 – Request for Intervener Status
C3-1	**BRITISH COLUMBIA MUNICIPAL ELECTRICAL UTILITIES (BCMEU) -** Letter dated January 15, 2019 – Request to Intervene by Marg Craig, Corporation of the City of Nelson
C3-2	Letter dated January 31, 2019 – BCMEU Information Request No. 1 to FBC
C3-3	Letter dated January 31, 2019 – BCMEU Submitting Confidentiality Declaration and Undertaking for Marg Craig and Alex Love
C3-4	Letter dated February 21, 2019 – BCMEU Submitting comments on further process
C4-1	**INDUSTRIAL CUSTOMERS GROUP (ICG) -** Letter dated January 16, 2019 – Request to Intervene by Robert Hobbs
C4-2	Letter dated January 29, 2019 – ICG Submitting Confidential Undertaking for Elroy Switlishoff and Robert Hobbs
C4-3	Letter dated January 31, 2019 – ICG Submitting Information Request No. 1 to FBC
C4-3-1	**CONFIDENTIAL** - Letter dated January 31, 2019 – ICG Submitting Confidential Information Request No. 1 to FBC
C4-4	Letter dated February 15, 2019 – ICG Submitting comments on further process
C4-5	Letter dated March 7, 2019 – ICG Submitting Information Request No. 2 to FBC
C4-5-1	**CONFIDENTIAL** - Letter dated March 7, 2019 – ICG Submitting Confidential Information Request No. 2 to FBC
C4-6	Letter dated March 25, 2019 – ICG Notice of Intention to File Evidence and FBC IR Request
C4-6-1	Letter dated April 1, 2019 – ICG Response to FBC regarding ICG Request to FBC with respect to IR 2.12.1
C4-7	Letter dated April 2, 2019 – ICG Submitting comments on further process
C5-1	**BRITISH COLUMBIA OLD AGE PENSIONERS' ORGANIZATION ET AL (BCOAPO) –** Letter dated January 17, 2019 – Request to intervene by Leigha Worth
C5-2	Letter dated January 31, 2019 – BCOAPO Submitting Information Request No. 1 to FBC
C5-3	Letter dated February 21, 2019 – BCOAPO Submitting comments on further process
C5-4	Letter dated March 7, 2019 – BCOAPO Submitting Information Request No. 2 to FBC

C5-5 Letter dated March 20, 2019 – BCOAPO Submitting notice of co-counsel Ms. Irina Mis and expert consultant Mr. Bill Harper

C5-6 Letter dated April 2, 2019 – BCOAPO Submitting comments on further process

C6-1 **COMMERCIAL ENERGY CONSUMERS ASSOCIATION OF BRITISH COLUMBIA (CEC) -** Letter dated January 17, 2019 – Request to Intervene by Christopher Weafer

C6-2 Letter dated January 28, 2019 – CEC Submitting Confidential Undertaking for Christopher Weafer, David Craig and Janet Rhodes

C6-3 Letter dated January 31, 2019 – CEC Submitting Information Request No. 1 to FBC

C6-3-1 **CONFIDENTIAL** - Letter dated January 31, 2019 – CEC Submitting Confidential Information Request No. 1 to FBC

C6-4 Letter dated February 21, 2019 – CEC Submitting comments on further process

C6-5 Letter dated March 7, 2019 – CEC Submitting Information Request No. 2 to FBC

C6-5-1 **CONFIDENTIAL** - Letter dated March 7, 2019 – CEC Submitting Confidential Information Request No. 2 to FBC

C6-6 Letter dated April 2, 2019 – CEC Submitting comments on further process

INTERESTED PARTY DOCUMENTS

D-1 **BOYER, ALVIN** – Letter dated January 14, 2019 – Request for Interested Party Status

D-1-1 Boyer, A. – Letter of Comment dated January 12, 2019

LETTERS OF COMMENT

E-1 **HALL, WAYNE** – Letter of Comment dated January 13, 2019

E-2 **VAUGEOIS, LAURINE AND TERRY** – Letter of Comment dated January 14, 2019

E-3 **ZABINSKY, DANIEL** – Letter of Comment dated January 14, 2019

E-4 **SCHIESSER, ROY AND COLLEEN** – Letter of Comment dated January 16, 2019

E-5 **MURPHY, DAVID** – Letter of Comment dated January 16, 2019

E-6 **HALL, BONITA** – Letter of Comment dated January 16, 2019