bcuc
British Columbia
Utilities Commission

Suite 410, 900 Howe Street
Vancouver, BC Canada V6Z 2N3
bcuc.com

P: 604.660.4700
TF: 1.800.663.1385
F: 604.660.1102

ORDER NUMBER
R-21-19

IN THE MATTER OF
the *Utilities Commission Act*, RSBC 1996, Chapter 473

and

British Columbia Hydro and Power Authority
Mandatory Reliability Standards Assessment Report No. 12
Addressing Reliability Standards for Adoption in British Columbia

BEFORE:
W. M. Everett, QC, Panel Chair
A.K. Fung, QC, Commissioner

on September 26, 2019

ORDER

WHEREAS:

A. On May 1, 2019, the British Columbia Hydro and Power Authority (BC Hydro) filed Mandatory Reliability Standards (MRS) Assessment Report No. 12 (Report 12) with the British Columbia Utilities Commission (BCUC), assessing two new standards and eleven revised standards (collectively, Revised Standards) and two retired standards (Retired Standards) developed by the North American Electric Reliability Corporation (NERC) and/or the Western Electricity Coordinating Council (WECC). In Report 12, BC Hydro assessed reliability standards that were approved or retired by the Federal Energy Regulatory Commission (FERC) with an effective order within the period from December 1, 2017 and November 30, 2018 inclusive;

B. In Report 12, BC Hydro assessed thirteen Revised Standards based on defined terms contained in the NERC Glossary of Terms Used in Reliability Standards dated July 3, 2018 (NERC Glossary). In addition, BC Hydro assessed one new and four revised defined terms (collectively, Revised Terms) contained in the NERC Glossary;

C. In Report 12, BC Hydro recommends that all thirteen Revised Standards and all five Revised Terms are suitable for adoption in BC at this time as they will preserve or enhance the reliability of the bulk electric system (BES), and serve the public interest. BC Hydro also recommends that the two Retired Standards are suitable for retirement in BC;

D. BC Hydro recommends that, in connection with the adoption of Revised Standards CIP-003-7 and PRC 025-2, the BCUC adopt the BC-specific versions of the FERC approved Implementation Plans. BC Hydro provided BC specific versions of the CIP-003-7 and PRC-025-2 Implementation Plans as part of Report 12 for the BCUC's consideration;

E. By Order R-14-19 dated June 10, 2019, BC Hydro was directed to publish a notice of process for consideration of the adoption of Report 12 along with the established regulatory timetable for public

comment. The BCUC also requested that Entities identify any foreseen obstacles to 100 percent compliance with Revised Standard PRC-025-2 by the required BC effective date;

F. On July 5, 2019, FortisBC Inc. (FBC) submitted that its comments are reflected in BC Hydro's Report 12, that it has no additional comments and that it does not foresee any issues with achieving 100 percent compliance with Revised Standard PRC-025-02 by the BC effective date;

G. On July 5, 2019, Dokie General Partnership, Jimmie Creek Limited Partnership and Toba Montrose General Partnership submitted by letter of comment that they foresee significant compliance costs in order to be fully compliant with Revised Standard PRC-025-2 and recommended, amongst other things, that the BCUC consider further revisions to that Revised Standard. On August 28, 2019, Dokie General Partnership, Jimmie Creek Limited Partnership and Toba Montrose General Partnership submitted a further letter of comment to augment their initial response to Report 12 and reiterated that they foresee significant compliance costs in order to be fully compliant with Revised Standard PRC-025-2 and requested that the consider further revisions to that Revised Standard;

H. On August 7, 2019, the BCUC issued information requests (IRs) to BC Hydro in response to Report 12 and on August 28, 2019, BC Hydro submitted its IR responses;

I. BC Hydro submitted that any compliance relief process requested by Dokie General Partnership, Jimmie Creek Limited Partnership and Toba Montrose General Partnership with respect to Revised Standard PRC-025-2 should be addressed by the BCUC in a separate process, if required;

J. On September 3, 2019, FBC provided its comments on the regulatory timetable stating that it agreed with BC Hydro and further confirming that it does not intend to file final argument in the proceeding;

K. On September 3, 2019, the BCUC issued Order R-17-19 amending the regulatory timetable and removed the final argument phase of this proceeding;

L. The BCUC did not review the recoverability of the estimated costs to adopt the Revised Standards, Retired Standards and Revised Terms;

M. Pursuant to section 125.2(6) of the *Utilities Commission Act* (UCA), the BCUC must adopt the reliability standards addressed in Report 12 if the BCUC considers that the reliability standards are required to maintain or achieve consistency in BC with other jurisdictions that have adopted the reliability standards; and

N. The BCUC has reviewed and considered Report 12, the Revised Standards, Retired Standards and Revised Terms assessed therein, comments received from Entities and the responses to IRs and considers that the adoption of the recommendations in MRS Report 12 is warranted. Although not assessed by BC Hydro, the BCUC considers that the Compliance Provisions of the reliability standards should be adopted to maintain compliance monitoring consistency with other jurisdictions that have adopted the reliability standards with the Compliance Provisions. The BCUC considers it appropriate to provide effective dates for BC Entities to come into compliance with the Revised Standards and Revised Terms adopted in this order.

NOW THEREFORE pursuant to section 125.2 of the UCA, and for the reasons attached as Appendix A to this order, the BCUC orders as follows:

1. The thirteen Revised Standards assessed in Report 12 are adopted with effective dates in Table 1 of Attachment A to this order and each standard to be superseded by a Revised Standard adopted in this order shall remain in effect until the effective date of the Revised Standard superseding it. The two Retired Standards are retired as of the date specified in Table 1 of Attachment A to this Order.

2. All reliability standards listed in Attachment B to this order are effective in BC as of the dates shown. The effective dates for the reliability standards listed in Attachment B supersede the effective dates that were included in any similar list appended to any previous order of the BCUC.

3. Individual requirements within reliability standards that incorporate, by reference, reliability standards that have not been adopted by the BCUC, are of no force and effect in BC and individual requirements or sub-requirements within reliability standards, which the BCUC has adopted but for which the BCUC has not determined an effective date, are of no force and effect in BC.

4. Defined terms set out in the reliability standards bear the same meaning as those set out in the NERC Glossary. The effective date of each of the new or Revised Terms adopted are identified in Table 2 of Attachment A to this order. Each glossary term to be superseded by a Revised Term adopted in this order shall remain in effect until the effective date of the Revised Term superseding it.

5. The Revised Terms listed in Attachment C to this order are in effect in BC as of the effective dates indicated. The effective dates for the Revised Terms listed in Attachment C supersede the effective dates that were included in any similar list appended to any previous order made by the BCUC. Other terms in the NERC Glossary, which do not include a United States FERC approval date on or before November 30, 2018, are of no force or effect in BC.

6. The Compliance Provisions as defined in the Rules of Procedure for Reliability Standards in British Columbia that accompany each of the adopted reliability standards, are approved in the form directed by the BCUC and as amended from time to time.

7. The BC-specific versions of the CIP-003-07 and PRC-025-2 Implementation Plans are adopted in the form directed by the BCUC and as amended from time to time, and effective as indicated in Attachment D to this order. The BC-specific versions of the CIP-003-07 and PRC-025-2 Implementation Plans will be posted on the WECC website with links from the BCUC website.

8. The Revised Standards in their written form are adopted as set out in Attachment E to this order.

9. The reliability standards adopted in BC will be posted on the WECC website with a link from the BCUC website.

10. Entities subject to Mandatory Reliability Standards adopted in BC are required to report to the BCUC and may, on a voluntary basis, report to NERC as an Electric Reliability Organization or to FERC.

DATED at the City of Vancouver, in the Province of British Columbia, this 26th day of September 2019.

BY ORDER

Original signed by:

W. M. Everett, QC
Commissioner

Attachments

British Columbia Hydro and Power Authority
Mandatory Reliability Standards Assessment Report No. 12
Addressing Reliability Standards for Adoption in British Columbia

REASONS FOR DECISION

1.0 Application

On May 1, 2019, the British Columbia Hydro and Power Authority (BC Hydro) filed Mandatory Reliability Standards (MRS) Assessment Report No. 12 (Report 12) assessing two new standards, eleven revised standards and two retired standards developed by the North American Electric Reliability Corporation (NERC) and/or the Western Electricity Coordinating Council (WECC).

1.1 Regulatory Process

By Order R-14-19 dated June 10, 2019, the BCUC established a regulatory timetable and required BC Hydro to publish a notice of process for Report 12 to all registered Entities. The BCUC also requested Entities to identify any foreseen obstacles to 100 percent compliance with revised standard PRC-025-2 by that standard's BC effective date.

FortisBC Inc. (FBC) submitted that its comments are reflected in Report 12, that it had no additional comments and that it does not foresee any issues with achieving 100 percent compliance with revised standard PRC-025-2 by its effective date.

Dokie General Partnership, Jimmie Creek Limited Partnership and Toba Montrose General Partnership (Three Entities) submitted by letter of comment that they foresee significant compliance costs in order to be fully compliant with revised standard PRC-025-2 and recommended, amongst other things, that the BCUC consider further revisions to that standard.

BC Hydro in its reply comment stated that it had previously consulted with BC MRS Entities and was unaware of any concerns regarding revised standard PRC-025-2, and as such, submitted that this standard is suitable for adoption in BC.

By Order R-16-19 dated July 26, 2019, the BCUC amended the regulatory timetable and requested Entities who wished to participate in this proceeding to register as interveners. Only FBC registered as an intervener.

BC Hydro submitted its response to BCUC Information Request No. 1 on August 28, 2019 and stated that the final argument phase of this proceeding may not be necessary. On September 3, 2019, FBC confirmed that it did not intend to file a final argument.

On August 28, 2019, the Three Entities submitted a further letter of comment to augment their initial response to Report 12 and reiterated that they foresee signficant expenditure in order to be fully compliant with revised standard PRC-025-2. They also requested that the BCUC consider further revisions to revised standard PRC-025-2.

By Order R-17-19 dated September 3, 2019, the BCUC amended the regulatory timetable and removed the final argument phase of this proceeding.

2.0 Compliance with PRC-025-2

The Three Entities are currently MRS registrants for both Generator Owner and Generator Operator functions[1] and submit that they are currently in compliance with PRC-025-1 due to the phased in mandatory effective date.[2] On October 1, 2020, when 100 percent compliance is effective, the Three Entities will no longer be able to maintain compliance with PRC-025-1.[3]

The Three Entities engaged a consultant to assess the equipment of their facilities against the requirements of revised standard PRC-025-1. The consultant reviewed the relay settings shown to be in non-compliance with PRC-025-1 with their facility design documents and equipment specifications and recommended that the settings remain unchanged, as these relay settings were implemented during the facility design phase to protect the equipment from thermal overloads.[4]

The Three Entities submit that a review of revised standard PRC-025-2 will not alleviate this compliance issue. Should the adoption of PRC-025-2 become effective October 1, 2019 as applied for, the Three Entities submit that they will seek compliance relief from the BCUC.[5]

The Three Entities submit that significant investment will have to made to bring their equipment to full compliance with the requirements of revised standard PRC-025-2.

Accordingly, they request that in the review of BC Hydro's recommendations for adoption of revised standard PRC-025-2, that the BCUC consider further revisions to the PRC-025-2.[6]

BC Hydro submits that during the process of assessing the reliability standards in Report 12, it consulted with BC MRS registered Entities, including the Three Entities, and has considered the comments received from the Three Entities. Nonetheless, BC Hydro's conclusion that revised standard PRC-025-2 will preserve or enhance the reliability of the Bulk Electric System (BES) in BC, and thus will serve the public interest and is suitable for adoption in British Columbia, remains unchanged.[7]

BC Hydro further submits that in reviewing each reliability standard in accordance with section 125.2(3)(c.1) of the *Utilities Commission Act* (UCA), it addresses the applicability of the reliability standard to ensure consistency with the functional registration categories contained in the BC MRS program. BC Hydro does not assess the applicability of the reliability standard to a specified person, a class of persons or a person in respect of specified equipment, and any issues regarding the applicability of reliability standards to particular Entities can and should be addressed in the context of the BCUC's registration and compliance regime.[8]

3.0 Regulatory Authority

In determining whether reliability standards should be adopted in BC, the Panel considers the following sections of the UCA:

---

[1] Exhibit E-2, p. 1.
[2] Ibid.
[3] Ibid.
[4] Ibid., p. 2.
[5] Ibid.
[6] Ibid.
[7] Exhibit B-2, pp. 1-2.
[8] Ibid., p. 2.

Section 125.2(2)

For greater certainty, the BCUC has exclusive jurisdiction to determine whether a reliability standard is in the public interest and should be adopted in British Columbia.

Section 125.2(6)

After complying with section 125.2(5), the BCUC, subject to section 125.2(7), must, by order, adopt the reliability standards addressed in the report if the BCUC considers that the reliability standards are required to maintain or achieve consistency in British Columbia with other jurisdictions that have adopted the reliability standards.

Section 125.2(7)

The BCUC is not required to adopt a reliability standard under section 125.2(6) if the BCUC determines, after a hearing, that the reliability standard is not in the public interest.

4.0 Panel Determination

The Three Entities have stated in letters of comment that the implementation of revised standard PRC-025-2 will result in their non-compliance and that it will require significant expenditure to be fully compliant with that standard.

The Panel observes that the Three Entities did not register as interveners in this proceeding and did not argue that adoption of revised standard PRC-025-2 in BC would not enhance the BES or be in the public interest.

BC Hydro submits that the Revised Standards and Revised Terms assessed in Report 12 will preserve or enhance the reliability of the BES. Furthermore, no evidence has been provided in this proceeding that would indicate otherwise. **The Panel therefore finds that adopting revised standard PRC-025-2, together with the other Revised Standards proposed for adoption in Report 12, will preserve or enhance reliability of the BES.**

The Panel also considered that the Revised Standards in Report 12 are FERC approved and adopted across the USA. In accordance with section 125.2(6) of the UCA, the BCUC must adopt the reliability standards addressed in the report if it considers that the reliability standards are required to maintain or achieve consistency in British Columbia with other jurisdictions that have adopted reliability standards. Moreover, section 125.2(7) of the UCA provides that the BCUC is not required to adopt a reliability standard if it determines, after a hearing, that the reliability standard is not in the public interest. The Panel notes that no evidence has been presented that the adoption of revised standard PRC-025-2 is not in the public interest. **Therefore, the Panel determines that the Revised Standards, including PRC-025-2, listed in Table 1 of Attachment A to this order are adopted and in the public interest and are thereby ordered to be effective in BC as of the dates shown therein.**

British Columbia Utilities Commission
Reliability Standards and Glossary Terms Adopted by this Order

Table 1 British Columbia Utilities Commission Reliability Standards with Effective Dates as Adopted

	Standard	Standard Name	Effective Date	Type	BCUC Approved Standard(s) Being Superseded[1]
1.	BAL-002-3	Disturbance Control Standard – Contingency Reserve for Recovery from a Balancing Contingency Event	April 1, 2020	Revised	BAL-002-2
2.	BAL-004-0	Time Error Correction	October 1, 2019	Retired	N/A-Retired standard
3.	BAL-004-WECC-3	Automatic Time Error Correction	January 1, 2020	Revised	BAL-004-WECC-2
4.	CIP-003-7	Cyber Security — Security Management Controls	October 1, 2019	Revised	CIP-003-5
5.	EOP-004-4	Event Reporting	October 1, 2020	Revised	EOP-004-3
6.	EOP-005-3	System Restoration from Blackstart Resources	October 1, 2020	Revised	EOP-005-2
7.	EOP-006-3	System Restoration Coordination	October 1, 2020	Revised	EOP-006-2
8.	EOP-008-2	Loss of Control Center Functionality	October 1, 2020	Revised	EOP-008-1
9.	FAC-501-WECC-2	Transmission Maintenance	October 1, 2019	Revised	FAC-501-WECC-1
10.	PER-003-2	Operating Personnel Credentials	April 1, 2020	Revised	PER-003-1 and PER-004-2
11.	PER-006-1	Specific Training for Personnel	October 1, 2021	New	PRC-001-1.1(ii) Requirement R1
12.	PRC-025-2	Generator Relay Loadability	October 1, 2019	Revised	PRC-025-1
13.	PRC-027-1	Coordination of Protection Systems for Performance During Faults	October 1, 2021	New	PRC-001-1.1(ii) Requirements R3 & R4
14.	VAR-001-5	Voltage and Reactive Control	October 1, 2019	Revised	VAR-001-4.2
15.	VAR-002-WECC-2	Voltage and Reactive Control	October 1, 2019	Retired	N/A-Retired standard

[1] BCUC approved reliability standard to be superseded by the replacement or revised reliability standard assessed.

British Columbia Utilities Commission
Reliability Standards and Glossary Terms Adopted by this Order

Table 2 British Columbia Utilities Commission NERC Glossary Terms with Effective Dates as Adopted

	NERC Glossary Term	Acronym	Effective Date	BCUC Approved Term to be Replaced or Retired
1.	**Operational Planning Analysis** *Glossary term is specific to the new PER-006-1 standard in addition to the currently adopted IRO-008-1 standard*	OPA	October 1, 2021	Operational Planning Analysis
2.	**Protection System Coordination Study** *Glossary term is specific to the new PRC-027-1 standard*		October 1, 2021	New
3.	**Real-time Assessment** *Glossary term is specific to the new PER-006-1 standard in addition to the currently adopted IRO-008-1 standard*	RTA	October 1, 2021	Real-time Assessment
4.	**Removable Media** *Glossary term is specific to the revised CIP-003-7 standard in addition to the currently adopted CIP-010-2 standard*		October 1, 2019	Removable Media
5.	**Transient Cyber Asset** *Glossary term is specific to the revised CIP-003-7 standard in addition to the currently adopted CIP-010-2 standard*	TCA	October 1, 2019	Transient Cyber Asset

British Columbia Utilities Commission

Reliability Standards with Effective Dates adopted in British Columbia

Standard	Name	BCUC Order Adopting	Effective Date
BAL-001-2	Real Power Balancing Control Performance	R-14-16	July 1, 2016
BAL-002-2[1]	Disturbance Control Standard – Contingency Reserve for Recovery from a Balancing Contingency Event	R-39-17	January 1, 2018
BAL-002-3	Disturbance Control Standard – Contingency Reserve for Recovery from a Balancing Contingency Event	R-21-19	April 1, 2020
BAL-002-WECC-2a	Contingency Reserve	R-39-17	July 26, 2017
BAL-003-1.1	Frequency Response and Frequency Bias Setting	R-32-16A	October 1, 2016
BAL-004-0	Time Error Correction	G-67-09	November 1, 2010 Retired: October 1, 2019
BAL-004-WECC-2[1]	Automatic Time Error Correction	R-32-14	October 1, 2014
BAL-004-WECC-3	Automatic Time Error Correction	R-21-19	January 1, 2020
BAL-005-0.2b[1]	Automatic Generation Control	R-41-13	December 12, 2013 R2: Retired January 21, 2014[2]
BAL-005-1	Balancing Authority Control	R-33-18	October 1, 2019
BAL-006-2[3]	Inadvertent Interchange	R-1-13	April 15, 2013
CIP-002-5.1a	Cyber Security — BES Cyber System Categorization	R-33-18	October 1, 2018
CIP-003-5[1]	Cyber Security – Security Management Controls	R-38-15	October 1, 2018 R2.2, R2.3: Adoption held in abeyance pending the adoption of CIP-003-7
CIP-003-6[1]	Cyber Security — Security Management Controls	n/a	Adoption held in abeyance at this time[4]
CIP-003-7	Cyber Security — Security Management Controls	R-21-19	October 1, 2019
CIP-004-6	Cyber Security — Personnel & Training	R-39-17	October 1, 2018

1 Reliability standard is superseded by the revised/replacement reliability standard listed immediately below it as of the effective date(s) of the revised/replacement reliability standard.

2 On November 21, 2013, FERC Order 788 (referred to as Paragraph 81) approved the retiring of the reliability standard requirement.

3 Reliability standard is superseded by BAL-005-1 as of the BAL-005-1 effective date.

4 BC Hydro recommends that the CIP-003-6 reliability standard be held in abeyance and be of no force or effect in BC due to technical suitability issues that will not improve reliability and instead place undue burden on responsible entities. CIP-003-7 has been assessed under MRS Assessment Report (Report No. 12) which will supersede CIP-003-6.

Standard	Name	BCUC Order Adopting	Effective Date
CIP-005-5	Cyber Security – Electronic Security Perimeter(s)	R-38-15	October 1, 2018
CIP-006-6	Cyber Security — Physical Security of BES Cyber Systems	R-39-17	October 1, 2018
CIP-007-6	Cyber Security — System Security Management	R-39-17	October 1, 2018
CIP-008-5	Cyber Security – Incident Reporting and Response Planning	R-38-15	October 1, 2018
CIP-009-6	Cyber Security — Recovery Plans for BES Cyber Systems	R-39-17	October 1, 2018
CIP-010-2	Cyber Security – Configuration Change Management and Vulnerability Assessments	R-39-17	October 1, 2018
CIP-011-2	Cyber Security – Information Protection	R-39-17	October 1, 2018
CIP-014-2	Physical Security	R-32-16A	October 1, 2017 and as per BC-specific Implementation Plan
COM-001-3	Communications	R-39-17	R1, R2: October 1, 2017 R3-R13: October 1, 2018
COM-002-4	Operating Personnel Communications Protocols	R-32-16A	April 1, 2017
EOP-003-1[5]	Load Shedding Plans	G-67-09	November 1, 2010
EOP-003-2[6]	Load Shedding Plans	n/a	Adoption held in abeyance at this time[7]
EOP-004-3[1]	Event Reporting	R-39-17	October 1, 2017
EOP-004-4	Event Reporting	R-21-19	October 1, 2020
EOP-005-2[1]	System Restoration and Blackstart Resources	R-32-14	August 1, 2015 R3.1: Retired January 21, 2014[2]
EOP-005-3	System Restoration and Blackstart Resources	R-21-19	October 1, 2020
EOP-006-2[1]	System Restoration Coordination	R-32-14	August 1, 2014
EOP-006-3	System Restoration Coordination	R-21-19	October 1, 2020
EOP-008-1[1]	Loss of Control Center Functionality	R-32-14	August 1, 2015
EOP-008-2	Loss of Control Center Functionality	R-21-19	October 1, 2020

5 Reliability standard would be superseded by EOP-003-2 if adopted in BC. Adoption of EOP-003-2 pending reassessment.

6 Reliability standard is superseded by EOP-011-1 as of the EOP-011-1 effective date in conjunction with PRC-010-2 Requirement 1 if adopted in BC Adoption of PRC-010-2 pending reassessment.

7 Unable to assess based on undefined Planning Coordinator/Planning Authority footprints and entities responsible. The BCUC Reasons for Decision for Order R-41-13 (page 20), indicated that a separate process would be established to consider this matter as it pertains to BC.

Standard	Name	BCUC Order Adopting	Effective Date
EOP-010-1[8]	Geomagnetic Disturbance Operations	R-38-15	R1, R3: October 1, 2016 R2: At retirement of IRO-005-3.1a R3
EOP-011-1	Emergency Operations	R-39-17	October 1, 2018
FAC-001-2[1]	Facility Interconnection Requirements	R-38-15	October 1, 2016
FAC-001-3	Facility Interconnection Requirements	R-33-18	October 1, 2019
FAC-002-2	Facility Interconnection Studies	R-38-15	October 1, 2015
FAC-003-4	Transmission Vegetation Management	R-39-17	October 1, 2017
FAC-008-3	Facility Ratings	R-32-14	August 1, 2015 R4 and R5: Retired January 21, 2014[2]
FAC-010-3	System Operating Limits Methodology for the Planning Horizon	R-39-17	R1–R4: October 1, 2017 R5: Retired
FAC-011-3	System Operating Limits Methodology for the Operations Horizon	R-39-17	October 1, 2017
FAC-013-1[9]	Establish and Communicate Transfer Capability	G-67-09	November 1, 2010
FAC-013-2	Assessment of Transfer Capability for the Near-Term Transmission Planning Horizon	n/a	Adoption held in abeyance at this time[7]
FAC-014-2	Establish and Communicate System Operating Limits	G-167-10	January 1, 2011
FAC-501-WECC-1[1]	Transmission Maintenance	R-1-13	April 15, 2013
FAC-501-WECC-2	Transmission Maintenance	R-21-19	October 1, 2019
INT-004-3.1	Dynamic Transfers	R-38-15	R1, R2: October 1, 2015 R3: January 1, 2016
INT-006-4	Evaluation of Interchange Transactions	R-38-15	October 1, 2015
INT-009-2.1	Implementation of Interchange	R-38-15	October 1, 2015
INT-010-2.1	Interchange Initiation and Modification for Reliability	R-38-15	October 1, 2015
INT-011-1.1	Intra-Balancing Authority Transaction Identification	R-38-15	October 1, 2015
IRO-001-4	Reliability Coordination – Responsibilities	R-39-17	October 1, 2017

[8] Requirement 2 of the reliability standard will be effective upon the retirement of IRO-005-3.1a Requirement 3 which follows the effective date of IRO-002-4 (October 1, 2017; per BCUC Order R-39-17).

[9] Reliability standard would be superseded by the FAC-013-2 if adopted in BC. Adoption of FAC-013-2 pending reassessment.

Standard	Name	BCUC Order Adopting	Effective Date
IRO-002-2[10]	Reliability Coordination – Facilities	R-1-13	April 15, 2013
IRO-002-5	Reliability Coordination – Monitoring and Analysis	R-33-18	January 1, 2019
IRO-005-3.1a[10,11]	Reliability Coordination - Current Day Operations	R-32-14	August 1, 2014
IRO-006-5	Reliability Coordination – Transmission Loading Relief	R-1-13	April 15, 2013
IRO-006-WECC-2	Qualified Transfer Path Unscheduled Flow (USF) Relief	R-38-15	October 1, 2015
IRO-008-2	Reliability Coordinator Operational Analyses and Real-time Assessments	R-39-17	October 1, 2017
IRO-009-2	Reliability Coordinator Actions to Operate Within IROLs	R-39-17	October 1, 2017
IRO-010-2	Reliability Coordinator Data Specification and Collection	R-39-17	April 1, 2019
IRO-014-3	Coordination Among Reliability Coordinators	R-39-17	October 1, 2017
IRO-015-1[10]	Notification and Information Exchange	G-67-09	November 1, 2010
IRO-017-1	Outage Coordination	R-39-17	October 1, 2020
IRO-018-1[1]	Reliability Coordinator Real-time Reliability Monitoring and Analysis Capabilities	R-39-17	April 1, 2018
IRO-018-1(i)	Reliability Coordinator Real-time Reliability Monitoring and Analysis Capabilities	R-33-18	April 1, 2020
MOD-001-1a	Available Transmission System Capability	G-175-11	November 30, 2011
MOD-004-1	Capacity Benefit Margin	G-175-11	November 30, 2011
MOD-008-1	Transmission Reliability Margin Calculation Methodology	G-175-11	November 30, 2011
MOD-010-0[12]	Steady-State Data for Modeling and Simulation for the Interconnected Transmission System	G-67-09	November 1, 2010

10 Refer to "IRO and TOP Reliability Standards Supersession Mapping" section below.

11 Requirement 3 of the reliability standard is superseded by EOP-010-1 Requirement 2 as of the IRO-002-4 effective date (October 1, 2017; per BCUC Order R-39-17).

12 Reliability standard will be superseded by MOD-032-1 and MOD-033-1 if adopted in BC. Adoption of MOD-032-1 and MOD-033-1 pending reassessment.

Standard	Name	BCUC Order Adopting	Effective Date
MOD-012-0[12]	Dynamics Data for Modeling and Simulation of the Interconnected Transmission System	G-67-09	November 1, 2010
MOD-020-0	Providing Interruptible Demands and Direct Control Load management Data to System Operators and Reliability Coordinators	G-67-09	November 1, 2010
MOD-025-2	Verification and Data Reporting of Generator Real and Reactive Power Capability and Synchronous Condenser Reactive Power Capability	R-38-15	40% by October 1, 2017 60% by October 1, 2018 80% by October 1, 2019 100% by October 1, 2020
MOD-026-1	Verification of Models and Data for Generator Excitation Control System or Plant Volt/Var Control Functions	R-38-15	R1: October 1, 2016 R2: 30% by October 1, 2019 50% by October 1, 2021 100% by October 1, 2025 R3-R6: October 1, 2015
MOD-027-1	Verification of Models and Data for Turbine/Governor and Load Control or Active Power/Frequency Control Functions	R-38-15	R1: October 1, 2016 R2: 30% by October 1, 2019 50% by October 1, 2021 100% by October 1, 2025 R3-R5: October 1, 2015
MOD-028-2	Area Interchange Methodology	R-32-14	August 1, 2014
MOD-029-2a	Rated System Path Methodology	R-39-17	October 1, 2017
MOD-030-3	Flowgate Methodology	R-39-17	October 1, 2017
MOD-031-2	Demand and Energy Data	R-39-17	April 1, 2018
MOD-032-1	Data for Power System Modeling and Analysis	R-38-15	Effective date held in abeyance[7]
MOD-033-1	Steady-State and Dynamic System Model Validation	R-38-15	Effective date held in abeyance[7]
NUC-001-3	Nuclear Plant Interface Coordination	R-38-15	January 1, 2016
PER-001-0.2[10]	Operating Personnel Responsibility and Authority	R-41-13	December 12, 2013
PER-002-0	Operating Personnel Training	G-67-09	November 1, 2010
PER-003-1[1]	Operating Personnel Credentials	R-41-13	January 1, 2015
PER-003-2	Operating Personnel Credentials	R-21-19	April 1, 2020
PER-004-2[13]	Reliability Coordination – Staffing	R-1-13	January 15, 2013

[13] Reliability standard will be superseded by PER-003-2 if adopted in BC as of the PER-003-2 effective date.

Standard	Name	BCUC Order Adopting	Effective Date
PER-005-2	Operations Personnel Training	R-38-15	R1-R4, R6: October 1, 2016 R5: October 1, 2017
PER-006-1[14]	Specific Training for Personnel	R-21-19	October 1, 2021
PRC-001-1.1(ii)[15]	System Protection Coordination	R-32-16A	October 1, 2016
PRC-002-2	Disturbance Monitoring and Reporting Requirements	R-32-16A	R1, R5: April 1, 2017 R2–R4, R6–R11: staged as per BC-specific Implementation Plan R12: July 1, 2017
PRC-004-5(i)	Protection System Misoperation Identification and Correction	R-32-16A	October 1, 2017
PRC-004-WECC-2	Protection System and Remedial Action Scheme Misoperation	R-39-17	October 1, 2017
PRC-005-1.1b[1, 18]	Transmission and Generation Protection System Maintenance and Testing	R-32-14	January 1, 2015
PRC-005-2[1]	Protection System Maintenance	R-38-15	R1, R2, R5: October 1, 2017 R3, R4: staged as per BC-specific Implementation Plan
PRC-005-2(i)[1]	Protection System Maintenance	R-32-16A	R1, R2, R5: October 1, 2017 R3, R4: staged as per BC-specific Implementation Plan
PRC-005-6	Protection System, Automatic Reclosing and Sudden Pressure Relaying Maintenance	R-39-17	R1, R2, R5: October 1, 2019 R3, R4: See Implementation Plan
PRC-006-2[1, 16]	Automatic Underfrequency Load Shedding	n/a	Adoption held in abeyance at this time[7]
PRC-006-3	Automatic Underfrequency Load Shedding	n/a	Adoption held in abeyance at this time[7]
PRC-007-0[17]	Assuring consistency of entity Underfrequency Load Shedding Program Requirements	G-67-09	November 1, 2010
PRC-008-0[18]	Implementation and Documentation of Underfrequency Load Shedding Equipment Maintenance Program	G-67-09	November 1, 2010

14 Reliability standard will supersede PRC-001-1.1(ii) R1 as of the effective date of PER-006-1.

15 PRC-001-1.1(ii) Requirement 1 will be superseded by PER-006-1 as of the effective date of PER-006-1; PRC-001-1(ii) Requirements 3 and 4 will be superseded by PRC-027-1 as of the effective date of PRC-027-1; and, the rest of PRC-001-1.1(ii) will be superseded by other reliability standards as of October 1, 2020.

16 Reliability standard supersedes PRC-006-1 which has been held in abeyance due to the undefined Planning Coordinator/Planning Authority footprints and entities responsible.

17 Reliability standard will be superseded by PRC-006-2 if adopted in BC Adoption of PRC-006-2 pending reassessment.

18 Reliability standard is superseded by PRC-005-6 as per the PRC-005-6 BC-specific Implementation Plan.

Standard	Name	BCUC Order Adopting	Effective Date
PRC-009-0[17]	Analysis and Documentation of Underfrequency Load Shedding Performance Following an Underfrequency Event	G-67-09	November 1, 2010
PRC-010-0[1]	Technical Assessment of the Design and Effectiveness of Undervoltage Load Shedding Program	G-67-09	November 1, 2010 R2: Retired January 21, 2014[2]
PRC-010-2	Under Voltage Load Shedding	n/a	Adoption held in abeyance at this time[7]
PRC-011-0[18]	Undervoltage Load Shedding system Maintenance and Testing	G-67-09	November 1, 2010
PRC-012-2	Remedial Action Schemes	R-33-18	October 1, 2021 R1: Attachment 1, Section II Parts 6(d) and 6(e) to be determined. Unable to be assessed at this time.[7] R2: Attachment 2, Section I Parts 7(d) and 7(e) to be determined. Unable to be assessed at this time.[7] R4: To be determined. Unable to be assessed at this time.[7]
PRC-015-1[19]	Remedial Action Scheme Data and Documentation	R-39-17	October 1, 2017
PRC-016-1[19]	Remedial Action Scheme Misoperations	R-39-17	October 1, 2017
PRC-017-1[18]	Remedial Action Scheme Maintenance and Testing	R-39-17	October 1, 2017
PRC-018-1[20]	Disturbance Monitoring Equipment Installation and Data Reporting	G-67-09	November 1, 2010
PRC-019-2	Coordination of Generating Unit or Plant Capabilities, Voltage Regulating Controls and Protection	R-32-16A	40% by October 1, 2017 60% by October 1, 2018 80% by October 1, 2019 100% by October 1, 2020
PRC-021-1[21]	Under Voltage Load Shedding Program Data	G-67-09	November 1, 2010
PRC-022-1[21]	Under Voltage Load Shedding Program Performance	G-67-09	November 1, 2010 R2: Retired January 21, 2014[2]

19 Reliability standard is superseded by PRC-012-2 as of the PRC-012-2 effective date.
20 Reliability standard is superseded by PRC-002-2 as of the PRC-002-2 effective date.
21 Reliability standard is superseded by PRC-010-2 if adopted in BC Adoption of PRC-010-2 pending reassessment.

Standard	Name	BCUC Order Adopting	Effective Date
PRC-023-2[1, 22]	Transmission Relay Loadability	R-41-13	R1–R5: For circuits identified by sections 4.2.1.1 and 4.2.1.4: January 1, 2016 For circuits identified by sections 4.2.1.2, 4.2.1.3, 4.2.1.5 and 4.2.1.6: To be determined[7] R6: To be determined[7]
PRC-023-4	Transmission Relay Loadability	R-39-17	R1–R5 Circuits 4.2.1.1, 4.2.1.4: October 1, 2017 with the exception of Criterion 6 of R1 which will not become effective until PRC-025-1 R1 is completely effective in BC. Until then, PRC-023-2 R1, Criterion 6 will remain in effect. R1-R5 Circuits 4.2.1.2, 4.2.1.3, 4.2.1.5, 4.2.1.6 and R6: To be determined
PRC-024-2	Generator Frequency and Voltage Protective Relay Settings	R-32-16A	40% by October 1, 2017 60% by October 1, 2018 80% by October 1, 2019 100% by October 1, 2020
PRC-025-1[1]	Generator Relay Loadability	R-38-15	40% by October 1, 2017 60% by October 1, 2018 80% by October 1, 2019 100% by October 1, 2020
PRC-025-2	Generator Relay Loadability	R-21-19	October 1, 2019
PRC-026-1	Relay Performance During Stable Power Swings	n/a	Adoption held in abeyance at this time[7]
PRC-027-1[23]	Coordination of Protection Systems for Performance During Faults	R-21-19	October 1, 2021
TOP-001-1a[10]	Reliability Responsibilities and Authorities	R-1-13	January 15, 2013
TOP-001-4	Transmission Operations	R-33-18	October 1, 2020
TOP-002-2.1b[10]	Normal Operations Planning	R-41-13	December 12, 2013
TOP-002-4	Operations Planning	R-39-17	October 1, 2020
TOP-003-1[10]	Planned Outage Coordination	R-1-13	April 15, 2013
TOP-003-3	Operational Reliability Data	R-39-17	April 1, 2019

22 PRC-023-2 Requirement 1, Criterion 6 only is superseded by PRC-025-1 as of PRC-025-1's 100 per cent Effective Date.

23 Reliability standard will supersede PRC-001-1.1(ii) Requirements 3 and 4 as of the effective date of PRC-027-1.

Standard	Name	BCUC Order Adopting	Effective Date
TOP-004-2[10]	Transmission Operations	G-167-10	January 1, 2011
TOP-005-2a[10]	Operational Reliability Information	R-1-13	April 15, 2013
TOP-006-2[10]	Monitoring System Conditions	R-1-13	April 15, 2013
TOP-007-0[10]	Reporting System Operating Unit (SOL) and Interconnection Reliability Operating Limit (IROL) Violations	G-67-09	November 1, 2010
TOP-008-1[10]	Response to Transmission Limit Violations	G-67-09	November 1, 2010
TOP-010-1(i)	Real-time Reliability Monitoring and Analysis Capabilities	R-33-18	October 1, 2020
TPL-001-0.1[24]	System Performance Under Normal (No Contingency) Conditions (Category A)	G-167-10	January 1, 2011
TPL-001-4	Transmission System Planning Performance Requirements	R-27-18A	R1: July 1, 2019 R2–R6, R8: July 1, 2020 R7: To be determined[7]
TPL-002-0b[24]	System Performance Following Loss of a Single Bulk Electric System Element (Category B)	R-1-13	January 15, 2013
TPL-003-0b[24]	System Performance Following Loss of Two or More Bulk Electric System Elements (Category C)	R-32-14	August 1, 2014
TPL-004-0a[24]	System Performance Following Extreme Events Resulting in the Loss of Two or More Bulk Electric System Elements (Category D)	R-32-14	August 1, 2014
TPL-007-1	Transmission System Planned Performance for Geomagnetic Disturbance Events	n/a	Adoption held in abeyance at this time[7]
VAR-001-4.2[1]	Voltage and Reactive Control	R-33-18	October 1, 2018
VAR-001-5	Voltage and Reactive Control	R-21-19	October 1, 2019
VAR-002-4.1	Generator Operation for Maintaining Network Voltage Schedules	R-33-18	October 1, 2018
VAR-002-WECC-2	Automatic Voltage Regulators (AVR)	R-32-16A	October 1, 2016 Retired: October 1, 2019
VAR-501-WECC-2[1]	Power System Stabilizer (PSS)	R-32-16A	October 1, 2016

[24] Reliability standard is superseded by TPL-001-4 Requirements 2 to 6 and 8 as of their effective dates.

Standard	Name	BCUC Order Adopting	Effective Date
VAR-501-WECC-3.1	Power System Stabilizer (PSS)	R-33-18	October 1, 2020 R3: For units placed into service after the effective date: January 1, 2021 For units placed into service prior the effective date: January 1, 2024

British Columbia Utilities Commission

IRO and TOP Reliability Standards
Supersession Mapping

This following mapping shows the supersession of Requirements for the following IRO, TOP and PER reliability standards by the revised/replacement IRO and TOP reliability standards adopted or yet to be adopted in BC as of the effective date in the "BC Reliability Standards" section above:

IRO-002-2	-	Reliability Coordination - Facilities
IRO-005-3.1a	-	Reliability Coordination - Current Day Operations
IRO-015-1	-	Notifications and Information Exchange Between Reliability Coordinators
PER-001-0.2	-	Operating Personnel Responsibility and Authority
TOP-001-1a	-	Reliability Responsibilities and Authorities
TOP-002-2.1b	-	Normal Operations Planning
TOP-003-1	-	Planned Outage Coordination
TOP-004-2	-	Transmission Operations
TOP-005-2a	-	Operational Reliability Information
TOP-006-2	-	Monitoring System Conditions
TOP-007-0	-	Reporting System Operating Limit (SOL) and Interconnection Reliability Operating Limit (IROL) Violations
TOP-008-1	-	Response to Transmission Limit Violations

Standard IRO-002-2 — Reliability Coordination – Facilities	
Requirement Being Superseded	**Superseding BCUC Approved Standard(s)**
Requirements R1, R3-R5, R7 and R8	IRO-002-4
Requirement R2	IRO-010-2
Requirement R6	IRO-008-2

Standard IRO-005-3.1a — Reliability Coordination - Current Day Operations	
Requirement Being Superseded	**Superseding BCUC Approved Standard(s)**
Requirements R1-R3	IRO-002-4
Requirement R4	IRO-008-2
Requirements R5 and R8	IRO-001-4 IRO-002-4
Requirements R6 and R7	IRO-008-2 IRO-017-1
Requirement R8	IRO-001-4 IRO-002-4
Requirement R9	IRO-002-4 IRO-010-2
Requirement R10	IRO-009-1 TOP-001-4
Requirement R11	MOD-001-2, Requirement R2 (pending FERC adoption in the US and subsequent assessment and adoption in BC)

Standard IRO-005-3.1a — Reliability Coordination - Current Day Operations	
Requirement Being Superseded	**Superseding BCUC Approved Standard(s)**
Requirement R12	IRO-008-2

Standard IRO-015-1 — Notifications and Information Exchange Between Reliability Coordinators	
Requirement Being Superseded	**Superseding BCUC Approved Standard(s)**
Requirements R1 and R2	IRO-014-3
Requirement R3	IRO-010-2

Standard PER-001-0.2 — Operating Personnel Responsibility and Authority	
Requirement Being Superseded	**Superseding BCUC Approved Standard(s)**
All Requirements	TOP-001-4

Standard TOP-001-1a — Reliability Responsibilities and Authorities	
Requirement Being Superseded	**Superseding BCUC Approved Standard(s)**
Requirements R1, R2, R4, R5, R6	TOP-001-4
Requirement R3	IRO-001-4 TOP-001-4
Requirement R7	TOP-001-4 TOP-003-3 IRO-010-2
Requirement R8	EOP-003-2, Requirement 1 (adoption held in abeyance in BC due to PA/PC dependencies) IRO-009-2

Standard TOP-002-2.1b — Normal Operations Planning	
Requirement Being Superseded	**Superseding BCUC Approved Standard(s)**
Requirement R1	TOP-001-4 TOP-002-4
Requirements R2, R5-R9, R12	TOP-002-4
Requirement R3	IRO-017-1 TOP-003-3
Requirement R4	IRO-017-1 IRO-008-2
Requirement R10	IRO-017-1 TOP-001-4 TOP-002-4 TOP-003-3
Requirement R11	TOP-001-4 TOP-002-4

Standard TOP-002-2.1b — Normal Operations Planning	
Requirement Being Superseded	**Superseding BCUC Approved Standard(s)**
Requirement R13	TOP-001-4 TOP-003-3
Requirements R14, R15 and R19	TOP-003-3
Requirements R16, R17 and R18	IRO-010-2

Standard TOP-003-1 — Planned Outage Coordination	
Requirement Being Superseded	**Superseding BCUC Approved Standard(s)**
Requirement R1	IRO-010-2 TOP-003-3
Requirement R2	IRO-017-1 TOP-003-3
Requirement R3	TOP-001-4
Requirement R4	IRO-008-2 IRO-017-1

Standard TOP-004-2 — Transmission Operations	
Requirement Being Superseded	**Superseding BCUC Approved Standard(s)**
Requirement R1	TOP-001-4
Requirement R2	TOP-001-4 TOP-002-4
Requirements R3 and R4	TOP-001-4
Requirement R5	Retired
Requirement R6	IRO-017-1 TOP-001-4

Standard TOP-005-2a — Operational Reliability Information	
Requirement Being Superseded	**Superseding BCUC Approved Standard(s)**
Requirement R1	IRO-010-2 TOP-003-3
Requirement R2	TOP-003-3
Requirement R3	Retired

Standard TOP-006-2 — Monitoring System Conditions	
Requirement Being Superseded	**Superseding BCUC Approved Standard(s)**
Requirement R1	IRO-010-2 TOP-001-4 TOP-003-3
Requirement R2	IRO-002-4 TOP-001-4
Requirement R3	IRO-010-2 TOP-003-3
Requirement R4	TOP-003-3
Requirement R5	IRO-002-5 TOP-001-4
Requirement R6	TOP-003-3
Requirement R7	IRO-002-5 TOP-001-4

Standard TOP-007-0 — Reporting System Operating Limit (SOL) and Interconnection Reliability Operating Limit (IROL) Violations	
Requirement Being Superseded	**Superseding BCUC Approved Standard(s)**
Requirement R1	IRO-008-2 TOP-001-4
Requirement R2	IRO-009-2 TOP-001-4
Requirement R3	EOP-003-2, Requirement 1 (adoption held in abeyance in BC due to PA/PC dependencies) IRO-009-2
Requirement R4	IRO-008-2

Standard TOP-008-1 — Response to Transmission Limit Violations	
Requirement Being Superseded	**Superseding BCUC Approved Standard(s)**
Requirements R1	EOP-003-2, Requirement 1 (adoption held in abeyance in BC due to PA/PC dependencies) TOP-001-4
Requirements R2 and R3	TOP-001-4
Requirement R4	TOP-001-4 TOP-002-4 TOP-003-3

British Columbia (BC) Exceptions to the Glossary of Terms Used in North American Electric Reliability Corporation (NERC) Reliability Standards (NERC Glossary)

Updated by Order R-21-19, dated September 26, 2019

Introduction:

This document is to be used in conjunction with the NERC Glossary dated July 3, 2018.

- The NERC Glossary terms listed in Table 1 below are effective in BC on the date specified in the "Effective Date" column.
- Table 2 below outlines the adoption history by the BCUC of the NERC Glossaries in BC.
- Any NERC Glossary terms and definitions in the NERC Glossary that are not approved by FERC on or before November 30, 2018 are of no force or effect in BC.
- Any NERC Glossary terms that have been remanded or retired by NERC are of no force or effect in BC, with the exception of those remanded or retired NERC Glossary terms which have not yet been retired in BC.
- The Electric Reliability Council of Texas, Northeast Power Coordinating Council and Reliability First regional definitions listed at the end of the NERC Glossary have been adopted by the NERC Board of Trustees for use in regional standards and are of no force or effect in BC.

Table 1 BC Effective Date Exceptions to Definitions in the July 3, 2018 Version of the NERC Glossary

NERC Glossary Term	Acronym	Assessment Report Number	BCUC Order Number	BCUC Adoption or Retirement	Effective Date
Actual Frequency (F_A)	-	Report No. 11	R-33-18	Adoption	October 1. 2019
Actual Net Interchange (NI_A)	-	Report No. 11	R-33-18	Adoption	October 1, 2019
Automatic Time Error Correction (I_{ATEC})	-	Report No. 11	R-33-18	Adoption	October 1, 2019
Adjacent Balancing Authority	-	Report No. 8	R-38-15	Adoption	October 1, 2015
Alternative Interpersonal Communication	-	Report No. 9	R-32-16A	Adoption	October 1, 2017
Area Control Error (from NERC section of the Glossary)	ACE	Report No. 7	R-32-14	Adoption	October 1, 2014
Area Control Error (from the WECC Regional Definitions section of the Glossary)	ACE	Report No. 7	R-32-14	Retirement	October 1, 2014
Arranged Interchange	-	Report No. 8	R-38-15	Adoption	October 1, 2015
Attaining Balancing Authority	-	Report No. 8	R-38-15	Adoption	October 1, 2015
Automatic Generation Control	AGC	Report No. 11	R-33-18	Adoption	October 1, 2019
Automatic Time Error Correction	-	Report No. 7	R-32-14	Adoption	October 1, 2014
Balancing Authority	-	Report No. 11	R-33-18	Adoption	January 1, 2019
Balancing Contingency Event[1]	-	Report No. 10	R-39-17	Adoption	January 1, 2018
BES Cyber Asset[2]	-	Report No. 8	R-38-15	Adoption	Align with effective date of CIP Version 5 standards (CIP-002-5.1, CIP-003-5, CIP-004-5, CIP-005-5, CIP-006-5, CIP-007-5, CIP-008-5, CIP-009-5, CIP-010-1 and CIP-011-1) where this term is referenced.
BES Cyber Asset	BCA	Report No. 10	R-39-17	Adoption	October 1, 2018

[1] FERC approved terms in the NERC Glossary of Terms as of February 7, 2017; intended for BAL-002-2.

[2] NERC Glossary term definition is superseded by the revised NERC Glossary term definition listed immediately below it as of the effective date(s) of the revised NERC Glossary term definition.

NERC Glossary Term	Acronym	Assessment Report Number	BCUC Order Number	BCUC Adoption or Retirement	Effective Date
BES Cyber System	-	Report No. 8	R-38-15	Adoption	Align with effective date of CIP Version 5 standards (CIP-002-5.1, CIP-003-5, CIP-004-5, CIP-005-5, CIP-006-5, CIP-007-5, CIP-008-5, CIP-009-5, CIP-010-1 and CIP-011-1) where this term is referenced.
BES Cyber System Information	-	Report No. 8	R-38-15	Adoption	Align with effective date of CIP Version 5 standards (CIP-002-5.1, CIP-003-5, CIP-004-5, CIP-005-5, CIP-006-5, CIP-007-5, CIP-008-5, CIP-009-5, CIP-010-1 and CIP-011-1) where this term is referenced.
Blackstart Capability Plan	-	Report No. 7	R-32-14	Retirement	August 1, 2015
Blackstart Resource[2]	-	Report No. 6	R-41-13	Adoption	December 12, 2013
Blackstart Resource	-	Report No. 10	R-39-17	Adoption	October 1, 2017
Bulk Electric System	BES	Report No. 8	R-38-15	-	October 1, 2015
Bulk-Power System[2]	-	Report No. 8	R-38-15	-	October 1, 2015
Bulk-Power System	-	Report No. 10	R-39-17	Adoption	October 1, 2017
Bus-tie Breaker	-	TPL-001-4	R-27-18A	Adoption	July 1, 2019
Cascading	-	Report No. 10	R-39-17	Adoption	October 1, 2017
CIP Exceptional Circumstance	-	Report No. 8	R-38-15	Adoption	Align with effective date of CIP Version 5 standards (CIP-002-5.1, CIP-003-5, CIP-004-5, CIP-005-5, CIP-006-5, CIP-007-5, CIP-008-5, CIP-009-5, CIP-010-1 and CIP-011-1) where this term is referenced.
CIP Senior Manager	-	Report No. 8	R-38-15	Adoption	Align with effective date of CIP Version 5 standards (CIP-002-5.1, CIP-003-5, CIP-004-5, CIP-005-5, CIP-006-5, CIP-007-5, CIP-008-5, CIP-009-5, CIP-010-1 and CIP-011-1) where this term is referenced.
Composite Confirmed Interchange	-	Report No. 8	R-38-15	Adoption	October 1, 2015
Confirmed Interchange	-	Report No. 8	R-38-15	Adoption	October 1, 2015
Composite Protection System	-	Report No. 9	R-32-16A	Adoption	October 1, 2017
Consequential Load Loss	-	TPL-001-4	R-27-18A	Adoption	July 1, 2019

NERC Glossary Term	Acronym	Assessment Report Number	BCUC Order Number	BCUC Adoption or Retirement	Effective Date
Contingency Event Recovery Period[1]	-	Report No. 10	R-39-17	Adoption	January 1, 2018
Contingency Reserve[1]	-	Report No. 10	R-39-17	Adoption	January 1, 2018
Contingency Reserve Restoration Period[1]	-	Report No. 10	R-39-17	Adoption	January 1, 2018
Control Center	-	Report No. 8	R-38-15	Adoption	Align with effective date of CIP Version 5 standards (CIP-002-5.1, CIP-003-5, CIP-004-5, CIP-005-5, CIP-006-5, CIP-007-5, CIP-008-5, CIP-009-5, CIP-010-1 and CIP-011-1) where this term is referenced.
Critical Assets	-	Report No. 9	R-32-16A	Retirement	September 30, 2018
Critical Cyber Assets	-	Report No. 9	R-32-16A	Retirement	September 30, 2018
Cyber Assets	-	Report No. 8	R-38-15	Adoption	Align with effective date of CIP Version 5 standards (CIP-002-5.1, CIP-003-5, CIP-004-5, CIP-005-5, CIP-006-5, CIP-007-5, CIP-008-5, CIP-009-5, CIP-010-1 and CIP-011-1) where this term is referenced.
Cyber Security Incident	-	Report No. 8	R-38-15	Adoption	Align with effective date of CIP Version 5 standards (CIP-002-5.1, CIP-003-5, CIP-004-5, CIP-005-5, CIP-006-5, CIP-007-5, CIP-008-5, CIP-009-5, CIP-010-1 and CIP-011-1) where this term is referenced.
Demand-Side Management	DSM	Report No. 9	R-32-16A	Adoption	October 1, 2016
Dial-up Connectivity	-	Report No. 8	R-38-15	Adoption	Align with effective date of CIP Version 5 standards (CIP-002-5.1, CIP-003-5, CIP-004-5, CIP-005-5, CIP-006-5, CIP-007-5, CIP-008-5, CIP-009-5, CIP-010-1 and CIP-011-1) where this term is referenced.
Distribution Provider	DP	Report No. 10	R-39-17	Adoption	October 1, 2017
Disturbance	-	Report No. 11	R-33-18	Retirement	October 1, 2018
Dynamic Interchange Schedule or Dynamic Schedule	-	Report No. 8	R-38-15	Adoption	October 1, 2015
Electronic Access Control or Monitoring Systems	EACMS	Report No. 8	R-38-15	Adoption	Align with effective date of CIP Version 5 standards (CIP-002-5.1, CIP-003-5, CIP-004-5, CIP-005-5, CIP-006-5, CIP-007-5, CIP-008-5, CIP-009-5, CIP-010-1 and CIP-011-1) where this term is referenced.

NERC Glossary Term	Acronym	Assessment Report Number	BCUC Order Number	BCUC Adoption or Retirement	Effective Date
Electronic Access Point	EAP	Report No. 8	R-38-15	Adoption	Align with effective date of CIP Version 5 standards (CIP-002-5.1, CIP-003-5, CIP-004-5, CIP-005-5, CIP-006-5, CIP-007-5, CIP-008-5, CIP-009-5, CIP-010-1 and CIP-011-1) where this term is referenced.
Electronic Security Perimeter	ESP	Report No. 8	R-38-15	Adoption	Align with effective date of CIP Version 5 standards (CIP-002-5.1, CIP-003-5, CIP-004-5, CIP-005-5, CIP-006-5, CIP-007-5, CIP-008-5, CIP-009-5, CIP-010-1 and CIP-011-1) where this term is referenced.
Element	-	Report No. 10	R-39-17	Adoption	October 1, 2017
Energy Emergency	-	Report No. 9	R-32-16A	Adoption	October 1, 2016
Energy Emergency	-	Report No. 11	R-33-18	Retirement	October 1, 2018
External Routable Connectivity	-	Report No. 8	R-38-15	Adoption	Align with effective date of CIP Version 5 standards (CIP-002-5.1, CIP-003-5, CIP-004-5, CIP-005-5, CIP-006-5, CIP-007-5, CIP-008-5, CIP-009-5, CIP-010-1 and CIP-011-1) where this term is referenced.
Frequency Bias Setting	-	Report No. 8	R-38-15	Adoption	Align with earliest effective date of BAL-003-1 standard where this term is referenced
Frequency Response Measure	FRM	Report No. 8	R-38-15	Adoption	Align with earliest effective date of BAL-003-1 standard where this term is referenced
Frequency Response Obligation	FRO	Report No. 8	R-38-15	Adoption	Align with earliest effective date of BAL-003-1 standard where this term is referenced
Frequency Response Sharing Group	FRSG	Report No. 8	R-38-15	Adoption	Align with earliest effective date of BAL-003-1 standard where this term is referenced
Generator Operator	GOP	Report No. 10	R-39-17	Adoption	October 1, 2017
Generator Owner	GO	Report No. 10	R-39-17	Adoption	October 1, 2017
Geomagnetic Disturbance Vulnerability Assessment or GMD Vulnerability Assessment	GMD	Report No. 10	R-39-17	Adoption	To be determined[3]

[3] The NERC Glossary term is associated with reliability standard that is dependent on the Planning Authority/Planning Coordinator function. The BCUC Reasons for Decision for Order R-41-13 (page 20), indicated that a separate process would be established to consider this matter as it pertains to BC.

NERC Glossary Term	Acronym	Assessment Report Number	BCUC Order Number	BCUC Adoption or Retirement	Effective Date
Interactive Remote Access	-	Report No. 8	R-38-15	Adoption	Align with effective date of CIP Version 5 standards (CIP-002-5.1, CIP-003-5, CIP-004-5, CIP-005-5, CIP-006-5, CIP-007-5, CIP-008-5, CIP-009-5, CIP-010-1 and CIP-011-1) where this term is referenced.
Interchange Authority	IA	Report No. 10	R-39-17	Adoption	October 1, 2017
Interchange Meter Error (I_{ME})	-	Report No. 11	R-33-18	Adoption	October 1, 2019
Interconnected Operations Service	-	Report No. 10	R-39-17	Adoption	October 1, 2017
Interconnection	-	Report No. 10	R-39-17	Adoption	October 1, 2017
Interconnection Reliability Operating Limit	IROL	Report No. 6	R-41-13	Adoption	December 12, 2013
Intermediate Balancing Authority	-	Report No. 8	R-38-15	Adoption	October 1, 2015
Intermediate System	-	Report No. 8	R-38-15	Adoption	Align with effective date of CIP Version 5 standards (CIP-002-5.1, CIP-003-5, CIP-004-5, CIP-005-5, CIP-006-5, CIP-007-5, CIP-008-5, CIP-009-5, CIP-010-1 and CIP-011-1) where this term is referenced.
Interpersonal Communication	-	Report No. 9	R-32-16A	Adoption	October 1, 2017
Load-Serving Entity	LSE	Report No. 10	R-39-17	Adoption	October 1, 2017
Long-Term Transmission Planning Horizon	-	TPL-001-4	R-27-18A	Adoption	July 1, 2019
Low Impact BES Cyber System Electronic Access Point[4]	LEAP	Report No. 10		Adoption	Not recommended for adoption in BC at this time.
Low Impact External Routable Connectivity[4]	LERC	Report No. 10		Adoption	Not recommended for adoption in BC at this time.
Minimum Vegetation Clearance Distance	MVCD	Report No. 7	R-32-14	Adoption	August 1, 2015
Misoperation	-	Report No. 9	R-32-16A	Adoption	October 1, 2017

[4] Intended for CIP-003-6 and to be held in abeyance and be of no force or effect in BC due to technical suitability issues. When adopted by FERC, the NERC approved CIP-003-7(i) will retire these NERC Glossary terms. CIP-003-7(i) is anticipated to be assessed in the next MRS Assessment Report.

NERC Glossary Term	Acronym	Assessment Report Number	BCUC Order Number	BCUC Adoption or Retirement	Effective Date
Most Severe Single Contingency[1]	MSSC	Report No. 10	R-39-17	Adoption	January 1, 2018
Native Balancing Authority	-	Report No. 8	R-38-15	Adoption	October 1, 2015
Non-Consequential Load Loss	-	TPL-001-4	R-27-18A	Adoption	July 1, 2019
Non-Spinning Reserve	-	Report No. 11	R-33-18	Retirement	October 1, 2018
Operating Instruction	-	Report No. 9	R-32-16A	Adoption	April 1, 2017
Operational Planning Analysis[2]	-	Report No. 6	R-41-13	Adoption	December 12, 2013
Operational Planning Analysis[2]	-	Report No. 8	R-38-15	Adoption	October 1, 2015
Operational Planning Analysis[2]	-	Report No. 9	R-32-16A	Adoption	October 1, 2016
Operational Planning Analysis	OPA	Report No. 12	R-21-19	Adoption	October 1, 2021
Operations Support Personnel	-	Report No. 8	R-38-15	Adoption	Align with effective date of Requirement 5 of the PER-005-2 standard where this term is referenced
Physical Access Control Systems	PACS	Report No. 8	R-38-15	Adoption	Align with effective date of CIP Version 5 standards (CIP-002-5.1, CIP-003-5, CIP-004-5, CIP-005-5, CIP-006-5, CIP-007-5, CIP-008-5, CIP-009-5, CIP-010-1 and CIP-011-1) where this term is referenced.
Physical Security Perimeter	PSP	Report No. 8	R-38-15	Adoption	Align with effective date of CIP Version 5 standards (CIP-002-5.1, CIP-003-5, CIP-004-5, CIP-005-5, CIP-006-5, CIP-007-5, CIP-008-5, CIP-009-5, CIP-010-1 and CIP-011-1) where this term is referenced.
Planning Assessment	-	TPL-001-4	R-27-18A	Adoption	July 1, 2019
Planning Authority	PA	Report No. 10	R-39-17	Adoption	October 1, 2017
Point of Receipt	POR	Report No. 10	R-39-17	Adoption	October 1, 2017

NERC Glossary Term	Acronym	Assessment Report Number	BCUC Order Number	BCUC Adoption or Retirement	Effective Date
Pre-Reporting Contingency Event ACE Value[1]	-	Report No. 10	R-39-17	Adoption	January 1, 2018
Protected Cyber Assets[2]	PCA	Report No. 8	R-38-15	Adoption	Align with effective date of CIP Version 5 standards (CIP-002-5.1, CIP-003-5, CIP-004-5, CIP-005-5, CIP-006-5, CIP-007-5, CIP-008-5, CIP-009-5, CIP-010-1 and CIP-011-1) where this term is referenced.
Protected Cyber Assets	PCA	Report No. 10	R-39-17	Adoption	October 1, 2018
Protection System	-	Report No. 6	R-41-13	Adoption	January 1, 2015 for each entity to modify its protection system maintenance and testing program to reflect the new definition (to coincide with recommended effective date of PRC-005-1b) and until the end of the first complete maintenance and testing cycle to implement any additional maintenance and testing for battery chargers as required by that entity's program.
Protection System Coordination Study	-	Report No. 12	R-21-19	Adoption	October 1, 2021
Protection System Maintenance Program	PSMP	Report No. 8	R-38-15	Adoption	Align with effective date of Requirement 1 of the PRC-005-2 standard where this term is referenced
Protection System Maintenance Program *(PRC-005-4)*[5]	PSMP	Report No. 9		-	Not recommended for adoption in BC at this time.
Protection System Maintenance Program *(PRC-005-6)*	PSMP	Report No. 10	R-39-17	Adoption	October 1, 2019
Pseudo-Tie[2]	-	Report No. 8	R-38-15	Adoption	October 1, 2015
Pseudo-Tie	-	Report No. 11	R-33-18	Adoption	January 1, 2019
Reactive Power	-	Report No. 10	R-39-17	Adoption	October 1, 2017
Real Power	-	Report No. 10	R-39-17	Adoption	October 1, 2017
Real-time Assessment[2]	-	Report No. 6	R-41-13	Adoption	January 1, 2014
Real-time Assessment[2]	-	Report No. 9	R-32-16A	Adoption	October 1, 2016

[5] Intended for reliability standard PRC-005-4 which was deferred by FERC and is not included in Assessment Report No. 9.

NERC Glossary Term	Acronym	Assessment Report Number	BCUC Order Number	BCUC Adoption or Retirement	Effective Date
Real-time Assessment	RTA	Report No. 12	R-21-19	Adoption	October 1, 2021
Reliability Adjustment Arranged Interchange	-	Report No. 8	R-38-15	Adoption	October 1, 2015
Reliability Coordinator	RC	Report No. 10	R-39-17	Adoption	October 1, 2017
Reliability Directive	-	Report No. 9	R-32-16A	Retirement	July 18, 2016
Reliability Standard[2]	-	Report No. 8	R-32-14	Adoption	October 1, 2015
Reliability Standard	-	Report No. 10	R-39-17	Adoption	October 1, 2017
Reliable Operation[2]	-	Report No. 8	R-32-14	Adoption	October 1, 2015
Reliable Operation	-	Report No. 10	R-39-17	Adoption	October 1, 2017
Relief Requirement (WECC Regional Term)	-	Report No. 8	R-38-15	Adoption	Align with effective date of IRO-006-WECC-2 standard where this term is referenced
Remedial Action Scheme[2]	RAS	Report No. 1	G-67-09	Adoption	June 4, 2009
Remedial Action Scheme	RAS	Report No. 9		-	To be determined[3]
Removable Media[2]	-	Report No. 10	R-39-17	Adoption	October 1, 2018
Removable Media	-	Report No. 12	R-21-19	Adoption	October 1, 2019
Reporting ACE	-	Report No. 11	R-33-18	Adoption	October 1, 2019
Reportable Balancing Contingency Event[1]	-	Report No. 10	R-39-17	Adoption	January 1, 2018
Reportable Cyber Security Incident	-	Report No. 8	R-38-15	Adoption	Align with effective date of CIP Version 5 standards (CIP-002-5.1, CIP-003-5, CIP-004-5, CIP-005-5, CIP-006-5, CIP-007-5, CIP-008-5, CIP-009-5, CIP-010-1 and CIP-011-1) where this term is referenced.
Request for Interchange	RFI	Report No. 8	R-38-15	Adoption	October 1, 2015
Reserve Sharing Group	-	Report No. 10	R-39-17	Adoption	October 1, 2017
Reserve Sharing Group Reporting ACE[1]	-	Report No. 10	R-39-17	Adoption	January 1, 2018

NERC Glossary Term	Acronym	Assessment Report Number	BCUC Order Number	BCUC Adoption or Retirement	Effective Date
Resource Planner	RP	Report No. 10	R-39-17	Adoption	October 1, 2017
Scheduled Net Interchange (NIs)	-	Report No. 11	R-33-18	Adoption	October 1, 2019
Sink Balancing Authority	-	Report No. 8	R-38-15	Adoption	October 1, 2015
Source Balancing Authority	-	Report No. 8	R-38-15	Adoption	October 1, 2015
Special Protection System (Remedial Action Scheme) [2]	SPS	Report No. 1	G-67-09	Adoption	June 4, 2009
Special Protection System (Remedial Action Scheme)	SPS	Report No. 10	R-39-17	Adoption	Held in abeyance due to PC dependencies
Spinning Reserve	-	Report No. 11	R-33-18	Retirement	October 1, 2018
System Operating Limit	-	Report No. 10	R-39-17	Adoption	October 1, 2017
System Operator	-	Report No. 8	R-38-15	Adoption	Align with effective date of CIP Version 5 standards (CIP-002-5.1, CIP-003-5, CIP-004-5, CIP-005-5, CIP-006-5, CIP-007-5, CIP-008-5, CIP-009-5, CIP-010-1 and CIP-011-1) as reference is made to the term Control Center as part of the definition of System Operator. The term Control Center is in turn referenced from the CIP Version 5 standards.
Total Internal Demand	-	Report No. 9	R-32-16A	Adoption	October 1, 2016
Transient Cyber Asset[2]	-	Report No. 10	R-39-17	Adoption	October 1, 2018
Transient Cyber Asset	TCA	Report No. 12	R-21-19	Adoption	October 1, 2019
Transmission Customer	-	Report No. 10	R-39-17	Adoption	October 1, 2017
Transmission Operator	TOP	Report No. 10	R-39-17	Adoption	October 1, 2017
Transmission Owner	TO	Report No. 10	R-39-17	Adoption	October 1, 2017
Transmission Planner	TP	Report No. 10	R-39-17	Adoption	October 1, 2017
Transmission Service Provider	TSP	Report No. 10	R-39-17	Adoption	October 1, 2017
Under Voltage Load Shedding Program	-	Report No. 9		-	To be determined[3]

NERC Glossary Term	Acronym	Assessment Report Number	BCUC Order Number	BCUC Adoption or Retirement	Effective Date
Right-of-Way	ROW	Report No. 7	R-32-14	Adoption	August 1, 2015
TLR (Transmission Loading Relief) Log	-	Report No. 7	R-32-14	Adoption	August 1, 2014
Vegetation Inspection	-	Report No. 7	R-32-14	Adoption	August 1, 2015

Table 2 NERC Glossary Adoption History in BC

NERC Glossary of Terms Version Date	Assessment Report Number	BCUC Order Adoption Date	BCUC Order Adopting	Notes Pertaining to NERC Glossary Effective Date
February 12, 2008	Report No. 1	June 4, 2009	G-67-09	1. The NERC Glossaries listed became effective as of the date of the respective BCUC orders adopting them. See the exception of the BAL-001-2 Glossary Terms within the NERC Glossary dated December 7, 2015.[1] 2. Specific effective dates of new and revised NERC Glossary terms adopted in a BCUC order appear in attachments to the order. Each Glossary term to be superseded by a revised Glossary term adopted in the order shall remain in effect until the effective date of the Glossary term superseding it. 3. NERC Glossary terms which have not been approved by FERC are of no force or effect in BC. 4. Any NERC Glossary terms that have been remanded or retired by NERC are of no force or effect in BC, with the exception of those remanded or retired NERC Glossary terms which have not yet been retired in BC. 5. The Electric Reliability Council of Texas, Northeast Power Coordinating Council and Reliability First regional definitions listed at the end of the NERC Glossary of Terms are of no force or effect in BC.
April 20, 2010	Report No. 2	November 10, 2010	G-167-10	
August 4, 2011	Report No. 3	September 1, 2011	G-162-11 Replacing G-151-11	
December 13, 2011	Report No. 5	January 15, 2013	R-1-13	
December 5, 2012	Report No. 6	December 12, 2013	R-41-13	
January 2, 2014	Report No. 7	July 17, 2014	R-32-14	
October 1, 2014	Report No. 8	July 24, 2015	R-38-15	
December 7, 2015	BAL-001-2	April 21, 2016	R-14-16	
December 7, 2015	Report No. 9	July 18, 2016	R-32-16A	
November 28, 2016	Report No. 10	July 26, 2017	R-39-17	
November 28, 2016[2]	TPL-001-4	June 28, 2018	R-27-18A	
October 6, 2017	Report No. 11	October 1, 2018	R-33-18	
July 3, 2018	Report No. 12	September 26, 2019	R-21-19	

British Columbia Utilities Commission (BCUC)
Implementation Plan for Reliability Standard CIP–003–7
Cyber Security – Security Management Controls

Requested Approvals

- Reliability Standard CIP-003-7 Cyber Security – Security Management Controls
- Definition of Transient Cyber Asset (TCA)
- Definition of Removable Media

Requested Retirements

- Reliability Standard CIP-003-5 - Cyber Security – Security Management Controls
- Definition of Transient Cyber Asset (TCA)
- Definition of Removable Media

Applicable Entities

- Balancing Authority
- Distribution Provider
- Generator Operator
- Generator Owner
- Interchange Coordinator or Interchange Authority
- Reliability Coordinator
- Transmission Operator
- Transmission Owner

Background

On July 24, 2015, the BCUC issued Order R-38-15 pursuant to Assessment Report No. 8, approving ten Critical Infrastructure Protection (CIP) Reliability Standards (CIP Version 5) and new or modified definitions to be incorporated into the Glossary of Terms Used in Mandatory Reliability Standards, inclusive of the CIP-003-5 Reliability Standard with an effective date of October 1, 2018. Requirement R2 of the CIP-003-5 Reliability Standard requires the documentation and implementation of one or more cyber security policies pertaining to Low Impact Bulk Electric System (BES) Cyber Systems addressing the topics of cyber security awareness, electronic access control, physical security control and Cyber Security Incident Response.

The CIP-003-5 Reliability Standard, while adopted by the Federal Energy Regulatory Commission (FERC) Order No. 791 in the United States of America (US) on November 22, 2013, never actually became effective in the US by the scheduled effective date of April 1, 2016.

On January 21, 2016, FERC Order No. 822 adopted CIP-003-6 in the US. The order became effective in the US on March 31, 2016 per the US Federal Register and enforced an effective date of July 1, 2016 for CIP-003-6 with phased in compliance dates. CIP-003-6 superseded CIP-003-5 and modified CIP-003-5 Requirement R2 by moving it into CIP-003-6 Requirement R1, Part 1.2 and limited the requirement language to require only documentation of Low Impact BES Cyber System policies instead of also requiring implementation. However, CIP-003-6 introduced a new Requirement R2 to document and implement one or more prescriptive Low Impact BES Cyber System cyber security plans addressing the topics of cyber security awareness, electronic access controls, physical security controls and Cyber Security Incident Response in accordance with prescriptive elements identified per Attachment 1. CIP-003-6 also introduced new Low Impact External Routable Connectivity (LERC) and Low Impact Electronic Access Point (LEAP) NERC Glossary Terms in association with the electronic access control cyber security policy and cyber security plan requirements. The phased in compliance dates for CIP-003-6 were as follows:

- Requirement R1, Part 1.2 (effective in the US April 1, 2017; approximately 12 calendar months from the effective date of the order adopting CIP-003-6) requiring one or more policies for cyber security awareness, physical security controls, electronic access controls and Cyber Security Incident Response for Low Impact BES Cyber Systems;

- Requirement R2 (effective in the US April 1, 2017; approximately 12 calendar months from the effective date of the order adopting CIP-003-6) requiring implementation of one or more cyber security plans for Low Impact BES Cyber Systems addressing Attachment 1 Sections 1 through 4 which contain prescriptive topics addressing cyber security awareness, physical security controls, electronic access controls and Cyber Security Incident Response;
    - Implementation of one or more cyber security plans per Attachment 1, Sections 1 and 4 (effective in the US April 1, 2017; approximately 12 calendar months from the effective date of the order adopting CIP-003-6) addressing cyber security awareness and Cyber Security Incident Response respectively; and
    - Implementation of one or more cyber security plans per Attachment 1, Sections 2 and 3 (effective in the US September 1, 2018; approximately 17 calendar months from the effective date of the order adopting CIP-003-6) addressing physical security controls and electronic access controls respectively.

FERC Order No. 822 also directed NERC, among other things, to: (1) "develop modifications to the CIP Reliability Standards to provide mandatory protection for transient devices used at Low Impact BES Cyber Systems"; and (2) modify the definition of LERC in the NERC Glossary.

To address these directives, NERC modified Reliability Standard CIP-003-6 to become CIP-003-7. In response to the transient devices directive, NERC modified the definitions of Transient Cyber Asset (TCA) and Removable Media. The revised definitions ensure the applicability of security controls, provide clarity and accommodate the use of the terms for all impact levels: high, medium and low. The revised definitions will allow entities to deploy one program to manage TCAs and Removable Media across multiple impact levels.

Further, as an alternative to modifying the LERC definition, NERC retired the terms "LERC" and "LEAP", incorporating those concepts within the requirement language.

On July 26, 2017, the BCUC issued Order R-39-17 pursuant to Assessment Report No. 10, holding the CIP-003-6 Reliability Standard in abeyance due to the ongoing standard revisions underway by NERC.

On April 19, 2018, FERC Order No. 843 adopted CIP-003-7 in the US which superseded CIP-003-6. The order became effective in the US on June 25, 2018 per the US Federal Register. CIP-003-7 did not modify CIP-003-6 Requirement R1, Parts 1.2.1, 1.2.2 and 1.2.4 or Requirement R2, Attachment 1, Sections 1, 2 and 4. However, FERC Order No. 843 delayed the initial compliance dates for Requirement R2, Attachment 1, Sections 2 and 3 to align with the effective date of CIP-003-7 (January 1, 2020). FERC Order No. 843 therefore effectively gave US Registered Entities:

- Nearly four years from the effective date of the order adopting CIP-003-6 in the US (March 31, 2016) which introduced the requirement to document and implement one or more cyber security plans for Low Impact BES Cyber System associated physical security controls and electronic access controls (per CIP-003-7 Requirement R2, Attachment 1, Sections 2 and 3).
- At least 18 calendar months from the effective date of the order adopting CIP-003-7 in the US to implement net new requirements to:
    - Document one or more cyber security policies for Low Impact BES Cyber System associated Transient Cyber Asset Media and Removable Media (per CIP-003-7 Requirement R1, Part 1.2.5) and Low Impact BES Cyber System associated CIP Exceptional Circumstances (per CIP-003-7 Requirement R1, Part 1.2.6); and
    - Document and implement one or more cyber security plans for Low Impact BES Cyber System associated Transient Cyber Assets and Removable Media (per CIP-003-7 Requirement R2, Attachment 1, Section 5).

On September 27, 2018, the BCUC issued Order R-33-18 pursuant to Assessment Report No. 11, ordering that CIP-003-5 Requirements R2.2 and R2.3 pertaining to the documentation and implementation of Low Impact BES Cyber System electronic access control and physical security control policies be held in abeyance pending CIP-003-7 assessment in BC for potential adoption.

Effective Dates

The effective dates for the proposed Reliability Standard and Glossary terms are provided below.

Reliability Standard CIP-003-7

Reliability Standard CIP-003-7 shall become effective on October 1, 2019 with the following exceptions for initial compliance.

Compliance Date for CIP-003-7, Requirement R1, Parts 1.2.2 and 1.2.3 and Requirement R2 (in reference to Attachment 1, Sections 2 and 3)

- Registered Entities shall not be required to comply until the later of October 1, 2023

Compliance Date for CIP-003-7, Requirement R1, Parts 1.2.5 and 1.2.6 and Requirement R2 (in reference to Attachment 1, Sections 1, 4 and 5)

- Registered Entities shall not be required to comply until October 1, 2021.

Glossary Definitions of Transient Cyber Asset and Removable Media

The definitions of Transient Cyber Asset and Removable Media shall become effective on October 1, 2019 to coincide with the effective date of the CIP-003-7.

Planned or Unplanned Changes

Planned or Unplanned Changes Resulting in a Higher Categorization

This Implementation Plan incorporates by reference the section in the BCUC Implementation Plan for Version 5 CIP Cyber Security Standards included in BCUC Order R-38-15 titled Planned or Unplanned Changes Resulting in a Higher Categorization.[1]

Unplanned Changes Resulting in Low Impact Categorization

For unplanned changes resulting in a Low Impact BES Cyber System categorization where previously the asset containing Cyber Assets had no categorization, the Responsible Entity shall comply with all Requirements applicable to Low Impact BES Cyber Systems within 12 calendar months following the identification and categorization of the affected BES Cyber System.

Retirement Date

CIP-003-5

Reliability Standard CIP-003-5 shall be retired on September 30, 2019.

[1] Due to the length of that section, it is not reproduced herein.

British Columbia Utilities Commission (BCUC)
Implementation Plan for Reliability Standard PRC-025-2

Applicable Standard

- PRC-025-2 – Generator Relay Loadability

Requested Retirement

- PRC-025-1 – Generator Relay Loadability

Prerequisite Standard

- None

Applicable Entities*

- Generator Owner
- Transmission Owner
- Distribution Provider

*See the proposed standard for detailed applicability for functional entities and facilities.

Background

The Reliability Standard PRC-025-1 went into effect in British Columbia (BC) starting on October 1, 2017 under a phased implementation plan (40 percent of load responsive relays compliant by October 1, 2017, 60 percent of load responsive relays compliant by October 1, 2018, 80 percent of load responsive relays compliant by October 1, 2019 and 100 percent of load responsive relays compliant by October 1, 2020). The phased timeframe was provided to the Generator Owner, Transmission Owner or Distribution Provider to:

1) Apply settings to its existing load-responsive protective relays that are capable of meeting the standard while maintaining reliable fault protection; and/or

2) Replace legacy load-responsive protective relays with modern advanced-technology relays that can be set using functions such as load encroachment; and/or

3) Remove load-responsive protective relays as the best alternative to satisfy the entity's protection criteria and meet the requirements of PRC-025-1.

General Considerations

This Implementation Plan supersedes and retires the phased implementation timeframe per PRC-025-1 such that entities are not required to implement the requirements in the PRC-025 Reliability Standard until the dates provided herein. This Implementation Plan considers the scope of the PRC-025-2 revisions and the timing for BCUC approvals with respect to the phased-in implementation dates for PRC-025-1. The latest BC phased-in implementation date for PRC-025-1 of October 1, 2020 applies to both load-responsive protective relays where the applicable entity will be making a setting change to meet the setting criteria of the standard while maintaining reliable fault protection and to load-responsive protective relays where the applicable entity will be removing or replacing the relay to meet the setting criteria of the standard while maintaining reliable fault protection.

The PRC-025-2 Implementation Plan reflects consideration of the following:

- The phased-in implementation dates for PRC-025-1;
- The proposed Option 5b reduces the implementation burden to the applicable entities;

- The proposed revisions to Options 14b, 15b and 16b may give reason for entities to re-evaluate their settings for load-responsive protective relays;
- A few proposed Option(s) that now include the 50 element; and
- Generator outage cycles.

Effective Date

PRC-025-2

The standard shall become effective on October 1, 2019.

Effective Date and Phased-In Compliance Dates

Load responsive protective relays subject to the standard

Each Generator Owner, Transmission Owner or Distribution Provider shall not be required to comply with Requirement R1 until the following dates after the effective date of Reliability Standard PRC-025-2:

Requirement	Applicability	Implementation Date
R1	Each Generator Owner, Transmission Owner and Distribution Provider shall apply settings that are in accordance with PRC-025-2 – Attachment 1: Relay Settings, on each load- responsive protective relay while maintaining reliable fault protection.	October 1, 2020, except as noted for the PRC-025-2 Attachment 1, Table 1 Relay Loadability Evaluation Criteria, Options listed below.

Phased-in implementation of specific Table 1 Relay Loadability Evaluation Criteria Options		
Option	**Application and Relay Type**	**Implementation Date**
Option 5b	Asynchronous generating unit(s) (including inverter-based installations), including Elements utilized in the aggregation of dispersed power producing resources applying any phase overcurrent relay (e.g. 51, or 51V- R – voltage-restrained)[1]	Where determined by the Generator Owner, Transmission Owner or Distribution Provider that replacement or removal is not necessary, October 1, 2021.
		Where determined by the Generator Owner, Transmission Owner or Distribution Provider that replacement or removal is necessary, October 1, 2023.
Options 2a, 2b and 2c (50 element only)	Synchronous generating unit(s), including Elements utilized in the aggregation of dispersed power producing resources applying, specifically the phase overcurrent relay 50 element	Where determined by the Generator Owner, Transmission Owner or Distribution Provider that replacement or removal is not necessary, October 1, 2024.
		Where determined by the Generator Owner, Transmission Owner or Distribution Provider that replacement or removal is necessary, October 1, 2026.

[1] Phased-in implementation of the phase overcurrent relay 50 element is provided under Options 5a and 5b.

Options 5a and 5b (50 element only)	Asynchronous generating unit(s) (including inverter-based installations), including Elements utilized in the aggregation of dispersed power producing resources applying, specifically the phase overcurrent relay 50 element	Where determined by the Generator Owner, Transmission Owner or Distribution Provider that replacement or removal is not necessary, October 1, 2024.
		Where determined by the Generator Owner, Transmission Owner or Distribution Provider that replacement or removal is necessary, October 1, 2026.
Options 8a, 8b and 8c (50 element only)	Generator step-up transformer(s) connected to synchronous generators applying, specifically the phase overcurrent relay 50 element installed on generator- side of the GSU transformer	Where determined by the Generator Owner, Transmission Owner or Distribution Provider that replacement or removal is not necessary, October 1, 2024.
		Where determined by the Generator Owner, Transmission Owner or Distribution Provider that replacement or removal is necessary, October 1, 2026.
Option 11 (50 element only)	Generator step-up transformer(s) connected to asynchronous generators only (including inverter-based installations) applying, specifically the phase overcurrent 50 element – installed on generator-side of the GSU transformer	Where determined by the Generator Owner, Transmission Owner or Distribution Provider that replacement or removal is not necessary, October 1, 2024
		Where determined by the Generator Owner, Transmission Owner or Distribution Provider that replacement or removal is necessary, October 1, 2027
Options 13a and 13b (50 element only)	Unit auxiliary transformer(s) (UAT) applying, specifically the phase overcurrent 50 element applied at the high-side terminals of the UAT, for which operation of the relay will cause the associated generator to trip	Where determined by the Generator Owner, Transmission Owner or Distribution Provider that replacement or removal is not necessary, October 1, 2024.
		Where determined by the Generator Owner, Transmission Owner or Distribution Provider that replacement or removal is necessary, October 1, 2026.
Option 14b	Relays installed on the high-side of the GSU transformer, including relays installed on the remote end of line, for Elements that connect the GSU transformer(s) to the Transmission system that are used exclusively to export energy directly from a Bulk Electric System (BES) generating unit or generating plant (except that Elements may also supply generating plant loads) – connected to synchronous generators applying a phase distance relay (e.g., 21) – directional toward the Transmission system	Where determined by the Generator Owner, Transmission Owner or Distribution Provider that replacement or removal is not necessary, October 1, 2021.
		Where determined by the Generator Owner, Transmission Owner or Distribution Provider that replacement or removal is necessary, October 1, 2023.

Option 15b	Relays installed on the high-side of the GSU transformer, including relays installed at the remote end of the line, for Elements that connect the GSU transformer(s) to the Transmission system that are used exclusively to export energy directly from a BES generating unit or generating plant (except that Elements may also supply generating plant loads) – connected to synchronous generators applying a phase instantaneous overcurrent supervisory element (e.g. 50) – associated with current-based, communication-assisted schemes where the scheme is capable of tripping for loss of communications and/or phase time overcurrent relay (e.g. 51)	Where determined by the Generator Owner, Transmission Owner or Distribution Provider that replacement or removal is not necessary, October 1, 2021.
		Where determined by the Generator Owner, Transmission Owner or Distribution Provider that replacement or removal is necessary, October 1, 2023.
Option 16b	Relays installed on the high-side of the GSU transformer, including relays installed at the remote end of the line, for Elements that connect the GSU transformer(s) to the Transmission system that are used exclusively to export energy directly from a BES generating unit or generating plant (except that Elements may also supply generating plant load.) – connected to synchronous generators applying Phase directional instantaneous overcurrent supervisory element (e.g. 67) – associated with current-based, communication- assisted schemes where the scheme is capable of tripping for loss of communications directional toward the Transmission system and/or phase directional time overcurrent relay (e.g. 67) – directional toward the Transmission system	Where determined by the Generator Owner, Transmission Owner or Distribution Provider that replacement or removal is not necessary, October 1, 2021.
		Where determined by the Generator Owner, Transmission Owner or Distribution Provider that replacement or removal is necessary, October 1, 2023.

Load-responsive protective relays which become applicable to the standard

Each Generator Owner, Transmission Owner or Distribution Provider that owns load-responsive protective relays that become applicable to this standard, not because of the actions of itself including but not limited to changes in BCUC Registration Criteria or BES definition, shall not be required to comply with Requirement R1 until the following dates:

Requirement	Applicability	Implementation Date
R1	Each Generator Owner, Transmission Owner and Distribution Provider shall apply settings that are in accordance with PRC-025-2 Attachment 1: Relay Settings, on each load - responsive protective relay while maintaining reliable fault protection	Where determined by the Generator Owner, Transmission Owner or Distribution Provider that replacement or removal is not necessary, 60 months beyond the date the load-responsive protective relays become applicable to the standard.
		Where determined by the Generator Owner, Transmission Owner or Distribution Provider that replacement or removal is necessary, 84 months beyond the date the load-responsive protective relays become applicable to the standard.

Retirement Date

PRC-025-1

Reliability Standard PRC-025-1 shall be retired immediately prior to the effective date of PRC-025-2.

Phased-In Retirement

None.

A. Introduction

1. **Title:** Disturbance Control Standard – Contingency Reserve for Recovery from a Balancing Contingency Event

2. **Number:** BAL-002-3

3. **Purpose:** To ensure the Balancing Authority or Reserve Sharing Group balances resources and demand and returns the Balancing Authority's or Reserve Sharing Group's Area Control Error to defined values (subject to applicable limits) following a Reportable Balancing Contingency Event.

4. **Applicability:**

   4.1. Responsible Entity

   4.1.1. Balancing Authority

   4.1.1.1. A Balancing Authority that is a member of a Reserve Sharing Group is the Responsible Entity only in periods during which the Balancing Authority is not in active status under the applicable agreement or governing rules for the Reserve Sharing Group.

   4.1.2. Reserve Sharing Group

5. **Effective Date*:** See the Implementation Plan for BAL-002-3.

B. Requirements and Measures

R1. The Responsible Entity experiencing a Reportable Balancing Contingency Event shall: *[Violation Risk Factor: High] [Time Horizon: Real-time Operations]*

1.1. within the Contingency Event Recovery Period, demonstrate recovery by returning its Reporting ACE to at least the recovery value of:

- zero (if its Pre-Reporting Contingency Event ACE Value was positive or equal to zero); however, any Balancing Contingency Event that occurs during the Contingency Event Recovery Period shall reduce the required recovery: (i) beginning at the time of, and (ii) by the magnitude of, such individual Balancing Contingency Event,

or,

- its Pre-Reporting Contingency Event ACE Value (if its Pre-Reporting Contingency Event ACE Value was negative); however, any Balancing Contingency Event that occurs during the Contingency Event Recovery Period shall reduce the required recovery: (i) beginning at the time of, and (ii) by the magnitude of, such individual Balancing Contingency Event.

1.2. document all Reportable Balancing Contingency Events using CR Form 1.

1.3. deploy Contingency Reserve, within system constraints, to respond to all Reportable Balancing Contingency Events, however, it is not subject to compliance with Requirement R1 part 1.1 if the Responsible Entity:

1.3.1 is (i) a Balancing Authority or (ii) a Reserve Sharing Group with at least one member that:

- is experiencing a Reliability Coordinator declared Energy Emergency Alert Level, and
- is utilizing its Contingency Reserve to mitigate an operating emergency in accordance with its emergency Operating Plan, and
- has depleted its Contingency Reserve to a level below its Most Severe Single Contingency, and
- has, during communications with its Reliability Coordinator in accordance with the Energy Emergency Alert procedures, (i) notified the Reliability Coordinator of the conditions described in the preceding two bullet points preventing the Responsible Entity from complying with Requirement R1 part 1.1, and (ii) provided the Reliability Coordinator with an ACE recovery plan, including target recovery time

or,

1.3.2 the Responsible Entity experiences:

- multiple Contingencies where the combined MW loss exceeds its Most Severe Single Contingency and that are defined as a single Balancing Contingency Event, or
- multiple Balancing Contingency Events within the sum of the time periods defined by the Contingency Event Recovery Period and Contingency Reserve Restoration Period whose combined magnitude exceeds the Responsible Entity's Most Severe Single Contingency.

M1. Each Responsible Entity shall have, and provide upon request, as evidence, a CR Form 1 with date and time of occurrence to show compliance with Requirement R1. If Requirement R1 part 1.3 applies, then dated documentation that demonstrates compliance with Requirement R1 part 1.3 must also be provided.

R2. Each Responsible Entity shall develop, review and maintain annually, and implement an Operating Process as part of its Operating Plan to determine its Most Severe Single Contingency and make preparations to have Contingency Reserve equal to, or greater than the Responsible Entity’s Most Severe Single Contingency available for maintaining system reliability. *[Violation Risk Factor: High] [Time Horizon: Operations Planning]*

M2. Each Responsible Entity will have the following documentation to show compliance with Requirement R2:

- a dated Operating Process;
- evidence to indicate that the Operating Process has been reviewed and maintained annually; and,
- evidence such as Operating Plans or other operator documentation that demonstrate that the entity determines its Most Severe Single Contingency and that Contingency Reserves equal to or greater than its Most Severe Single Contingency are included in this process.

R3. Each Responsible Entity, following a Reportable Balancing Contingency Event, shall restore its Contingency Reserve to at least its Most Severe Single Contingency, before the end of the Contingency Reserve Restoration Period, but any Balancing Contingency Event that occurs before the end of a Contingency Reserve Restoration Period resets the beginning of the Contingency Event Recovery Period. *[Violation Risk Factor: Medium] [Time Horizon: Real-time Operations]*

M3. Each Responsible Entity will have documentation demonstrating its Contingency Reserve was restored within the Contingency Reserve Restoration Period, such as historical data, computer logs or operator logs.

C. Compliance

1. Compliance Monitoring Process

1.1. Compliance Enforcement Authority

The British Columbia Utilities Commission.

1.2. Evidence Retention

The following evidence retention period(s) identify the period of time an entity is required to retain specific evidence to demonstrate compliance. For instances where the evidence retention period specified below is shorter than the time since the last audit, the Compliance Enforcement Authority may ask an entity to provide other evidence to show that it was compliant for the full-time period since the last audit.

The Responsible Entity shall retain data or evidence to show compliance for the current year, plus three previous calendar years, unless directed by its Compliance Enforcement Authority to retain specific evidence for a longer period of time as part of an investigation.

If a Responsible Entity is found noncompliant, it shall keep information related to the noncompliance until found compliant, or for the time period specified above, whichever is longer.

The Compliance Enforcement Authority shall keep the last audit records and all subsequent requested and submitted records.

1.3. Compliance Monitoring and Assessment Processes:
As defined in the NERC Rules of Procedure, "Compliance Monitoring and Assessment Processes" refers to the identification of the processes that will be used to evaluate data or information for the purpose of assessing performance or outcomes with the associated Reliability Standard.

1.4. Additional Compliance Information
The Responsible Entity may use Contingency Reserve for any Balancing Contingency Event and as required for any other applicable standards.

Table of Compliance Elements

R #	Violation Severity Levels			
	Lower VSL	Moderate VSL	High VSL	Severe VSL
R1.	The Responsible Entity achieved less than 100% but at least 90% of required recovery from a Reportable Balancing Contingency Event during the Contingency Event Recovery Period OR The Responsible Entity failed to use CR Form 1 to document a Reportable Balancing Contingency Event.	The Responsible Entity achieved less than 90% but at least 80% of required recovery from a Reportable Balancing Contingency Event during the Contingency Event Recovery Period.	The Responsible Entity achieved less than 80% but at least 70% of required recovery from a Reportable Balancing Contingency Event during the Contingency Event Recovery Period.	The Responsible Entity achieved less than 70% of required recovery from a Reportable Balancing Contingency Event during the Contingency Event Recovery Period.
R2.	The Responsible Entity developed and implemented an Operating Process to determine its Most Severe Single Contingency and to have Contingency Reserve equal to, or greater than the Responsible Entity's Most Severe Single Contingency but failed to maintain annually the Operating	N/A	The Responsible Entity developed an Operating Process to determine its Most Severe Single Contingency and to have Contingency Reserve equal to, or greater than the Responsible Entity's Most Severe Single Contingency but failed to implement the Operating Process.	The Responsible Entity failed to develop an Operating Process to determine its Most Severe Single Contingency and to have Contingency Reserve equal to, or greater than the Responsible Entity's Most Severe Single Contingency.

	Process.			
R3.	The Responsible Entity restored less than 100% but at least 90% of required Contingency Reserve following a Reportable Balancing Contingency Event during the Contingency Event Restoration Period.	The Responsible Entity restored less than 90% but at least 80% of required Contingency Reserve following a Reportable Balancing Contingency Event during the Contingency Event Restoration Period.	The Responsible Entity restored less than 80% but at least 70% of required Contingency Reserve following a Reportable Balancing Contingency Event during the Contingency Event Restoration Period.	The Responsible Entity restored less than 70% of required Contingency Reserve following a Reportable Balancing Contingency Event during the Contingency Event Restoration Period.

D. Regional Variances

None.

E. Interpretations

None.

F. Associated Documents

CR Form 1

BAL-002-3 Rationales

Version History

Version	Date	Action	Change Tracking
0	April 1, 2005	Effective Date	New
0	August 8, 2005	Removed "Proposed" from Effective Date	Errata
0	February 14, 2006	Revised graph on page 3, "10 min." to "Recovery time." Removed fourth bullet.	Errata
1	September 9, 2010	Filed petition for revisions to BAL-002 Version 1 with the Commission	Revision
1	January 10, 2011	FERC letter ordered in Docket No. RD10-15-00 approving BAL-002-1	
1	April 1, 2012	Effective Date of BAL-002-1	
1a	November 7, 2012	Interpretation adopted by the NERC Board of Trustees	
1a	February 12, 2013	Interpretation submitted to FERC	
2	November 5, 2015	Adopted by NERC Board of Trustees	Complete revision
2	January 19, 2017	FERC Order approved BAL-002-2. Docket No. RM16-7-000	
2	October 2, 2017	FERC letter Order issued approving raising the VRF for Requirement R1 and R2 from Medium to High. Docket No. RD17-6-000.	
3	August 16, 2018	Adopted by NERC Board of Trustees	Revisions to address two FERC directives from Order No. 835
3	September 25, 2018	FERC Order approving BAL-002-3. Docket No. RD18-7-000	

A. Introduction

1. **Title:** Automatic Time Error Correction

2. **Number:** BAL-004-WECC-3

3. **Purpose:** To maintain Interconnection frequency and to ensure that Time Error Corrections and Primary Inadvertent Interchange (PII) payback are effectively conducted in a manner that does not adversely affect the reliability of the Interconnection.

4. **Applicability**

   4.1. Functional Entities

   4.1.1 Balancing Authorities that operate synchronously in the Western Interconnection.

5. **Effective Date*:** On the first day of the second quarter, after applicable regulatory approval has been received (or the Reliability Standard otherwise becomes effective the first day of the fourth quarter following NERC Board adoption where regulatory approval is not required).

B. Requirements and Measures

R1. Each Balancing Authority shall operate its system such that, following the conclusion of each month, the month-end absolute value of its On-Peak and Off-Peak, Accumulated Primary Inadvertent Interchange (PII_{accum}), as calculated by the WECC Interchange Tool (WIT) or its successor electronic confirmation tool, are each individually less than or equal to: *[Violation Risk Factor Medium:] [Time Horizon: Operations Assessment]*

1.1 For load-serving Balancing Authorities, 150% of the previous calendar year's integrated hourly Peak Demand,

1.2 For generation-only Balancing Authorities, 150% of the previous calendar year's integrated hourly peak generation.

M1. Each Balancing Authority will have evidence that it operated its system such that, following the conclusion of each month, the month-end absolute value of its On-Peak and Off-Peak, Accumulated Primary Inadvertent Interchange (PII_{accum}), as calculated by the WECC Interchange Tool (WIT) or its successor electronic confirmation tool, meets all criteria stated in Requirement R1.

R2. Each Balancing Authority shall, upon discovery of an error in the calculation of PII_{hourly}, recalculate within 90 days, the value of PII_{hourly} and adjust the PII_{accum} from the time of the error. *[Violation Risk Factor: Medium] [Time Horizon: Operations Assessment]*

M2. Forms of acceptable evidence of compliance with Requirement R2 include but are not limited to any one of the following:

- Data, screen shots from the WECC Interchange Tool (WIT) or its successor electronic

confirmation tool,

- Data, screen shots from the internal Balancing Authority tool, or
- Production of data from any other databases, spreadsheets, displays.

R3. Each Balancing Authority shall keep its Automatic Time Error Correction (ATEC) in service, with an allowable exception period of less than or equal to an accumulated 24 hours per calendar quarter for ATEC to be out of service. *[Violation Risk Factor: Medium] [Time Horizon: Same-day Operations]*

M3. Forms of acceptable evidence of compliance with Requirement R3 may include, but are not limited to:

- Dated archived files,
- Historical data,
- Other data that demonstrates the ATEC was out of service for less than 24 hours per calendar quarter.

R4. Each Balancing Authority shall compute each of the following using the WECC Interchange Tool (WIT) or its successor electronic confirmation tool, no later than 50 minutes after each hour,

4.1. $PII_{\mathbf{hourly}}$,

4.2. PII_{accum},

4.3. Automatic Time Error Correction term (I_{ATEC}).

[Violation Risk Factor: Medium] [Time Horizon: Operations Assessment]

M4. Forms of acceptable evidence of compliance with Requirement R4 include but are not limited to any one of the following:

- Data, screen shots from the WECC Interchange Tool (WIT) or its successor electronic confirmation tool, that demonstrate compliance;
- Data, screen shots from internal Balancing Authority tool that demonstrate compliance; or,
- Data from any other databases, spreadsheets, displays that demonstrate compliance.

R5. Each Balancing Authority shall be able to change its Automatic Generation Control operating mode between Flat Frequency (for blackout restoration); Flat Tie Line (for loss of frequency telemetry); Tie Line Bias; and Tie Line Bias plus Time Error Control (used in ATEC mode), to correspond to current operating conditions. *[Violation Risk Factor: Medium] [Time Horizon: Real-Time Operations]*

M5. Forms of acceptable evidence of compliance with Requirement R5 include but

are not limited to any one of the following:

- Screen shots from Energy Management System,
- Demonstration using an off-line system.

R6. Each Balancing Authority shall recalculate the PII_{hourly} and PII_{accum} for the On-Peak and Off-Peak periods whenever adjustments are made to hourly Inadvertent Interchange or ΔTE. *[Violation Risk Factor: Medium] [Time Horizon: Operations Assessment]*

M6. Forms of acceptable evidence of compliance with Requirement R6 include but are not limited to any one of the following:

- Data, screen shots from the WECC Interchange Tool (WIT) or its successor electronic confirmation tool, that demonstrate compliance;
- Data, screen shots from an internal Balancing Authority tool that demonstrate compliance with; or,
- Data from any other databases, spreadsheets, displays that demonstrate compliance.

R7. Each Balancing Authority shall make the same adjustment to the PII_{accum} as it did for any month-end meter reading adjustments to Inadvertent Interchange. *[Violation Risk Factor: Medium] [Time Horizon: Operations Assessment]*

M7. Forms of acceptable evidence of compliance with Requirement R7 include but are not limited to any one of the following:

- Data, screen shots from the WECC Interchange Tool (WIT) or its successor electronic confirmation tool, that demonstrate compliance;
- Data, screen shots from an internal Balancing Authority tool that demonstrate compliance; or,
- Production of data from any other databases, spreadsheets, displays that demonstrate compliance.

R8. Each Balancing Authority shall payback Inadvertent Interchange using ATEC rather than bilateral and unilateral payback. *[Violation Risk Factor: Medium] [Time Horizon: Operations Assessment]*

M8. Forms of acceptable evidence of compliance with Requirement R8 include but are not limited to historical On-Peak and Off-Peak Inadvertent Interchange data, data from the WECC Interchange Tool, and ACE data.

C. Compliance

1. Compliance Monitoring Process

1.1 Compliance Enforcement Authority

The British Columbia Utilities C ommission.

1.2 Compliance Monitoring and Assessment Processes:

Compliance Audits

Self-Certifications

Spot Checking

Compliance Investigations

Self-Reporting

Complaints

1.3 Evidence Retention

The following evidence retention periods identify the period of time an entity is required to retain specific evidence to demonstrate compliance. For instances where the evidence retention period specified below is shorter than the time since the last audit, the Compliance Enforcement Authority may ask an entity to provide other evidence to show that it was compliant for the full time period since the last audit.

Each Balancing Authority in the Western Interconnection shall retain the values of PII_{hourly}, PII_{accum} (On-Peak and Off-Peak), ΔTE and any month-end adjustments for the preceding calendar year (January – December), as well as the current calendar year.

Each Balancing Authority in the Western Interconnection shall retain the amount of time the Balancing Authority operated without ATEC for the preceding calendar year (January – December), as well as the current calendar year.

1.4 Additional Compliance Information

None

Table of Compliance Elements

R #	Time Horizon	VRF	Violation Severity Levels			
			Lower VSL	Moderate VSL	High VSL	Severe VSL
R1	Operations Assessment	Medium	Following the conclusion of each month each Balancing Authority's absolute value of PII_{accum} for either the On-Peak period or Off-Peak period exceeded 150%, but was less than or equal to 160% of the previous calendar year's Peak Demand or peak generation for generation-only Balancing Authorities.	Following the conclusion of each month each Balancing Authority's absolute value of PII_{accum} for either the On-Peak period or Off-Peak period exceeded 160%, but was less than or equal to 170% of the previous calendar year's Peak Demand or peak generation for generation-only Balancing Authorities.	Following the conclusion of each month each Balancing Authority's absolute value of PII_{accum} for either the On-Peak period or Off-Peak period exceeded 170%, but was less than or equal to 180% of the previous calendar year's Peak Demand or peak generation for generation-only Balancing Authorities.	Following the conclusion of each month each Balancing Authority's absolute value of PII_{accum} for either the On-Peak period or Off-Peak period exceeded 180% of the previous calendar year's Peak Demand or peak generation for generation-only Balancing Authorities.
R2	Operations Assessment	Medium	The Balancing Authority did not recalculate PII_{hourly} and adjust the PII_{accum} within 90 days of the discovery of the error; but made the required recalculations and adjustments within 120 days.	The Balancing Authority did not recalculate PII_{hourly} and adjust the PII_{accum} within 120 days of the discovery of the error; but made the required recalculations and adjustments within 150 days.	The Balancing Authority did not recalculate PII_{hourly} and adjust the PII_{accum} within 150 days of the discovery of the error; but made the required recalculations and adjustments within 180 days.	The Balancing Authority did not recalculate PII_{hourly} and adjust PII_{accum} within 180 days of the discovery of the error.

R #	Time Horizon	VRF	Violation Severity Levels			
			Lower VSL	Moderate VSL	High VSL	Severe VSL
R3	Real-Time Operations	Medium	The Balancing Authority operated during a calendar quarter without ATEC in service for more than an accumulated 24 hours, but less than or equal to 72 hours.	The Balancing Authority operated during a calendar quarter without ATEC in service for more than an accumulated 72 hours, but less than or equal to 120 hours.	The Balancing Authority operated during a calendar quarter without ATEC in service for more than an accumulated 120 hours, but less than or equal to 168 hours	The Balancing Authority operated during a calendar quarter without ATEC in service for more than an accumulated 168 hours.
R4	Operations Assessment	Medium	The Balancing Authority did not compute PII_{hourly}, PII_{accum}, and I_{ATEC} within 50 minutes, but made the required calculations in less than or equal to two hours.	The Balancing Authority did not compute PII_{hourly}, PII_{accum}, and I_{ATEC} within two hours, but made the required calculations in less than or equal to four hours.	The Balancing Authority did not compute PII_{hourly}, PII_{accum}, and I_{ATEC} within four hours, but made the required calculations in less than or equal to six hours.	The Balancing Authority did not compute PII_{hourly}, PII_{accum}, and I_{ATEC} within six hours.
R5	Real-Time Operations	Medium	N/A	N/A	N/A	The Balancing Authority is not able to change its AGC operating mode between Flat Frequency (for blackout restoration; Flat Tie Line (for loss of frequency

R #	Time Horizon	VRF	Violation Severity Levels			
			Lower VSL	Moderate VSL	High VSL	Severe VSL
						telemetry); Tie Line Bias; or Tie Line Bias plus Time Error control (used in ATEC mode).
R6	Operations Assessment	Medium	N/A	N/A	N/A	When making adjustments to hourly Inadvertent Interchange or ΔTE, the Balancing Authority did not recalculate the PII_{hourly} and the PII_{accum} for the On-Peak and Off-Peak periods.
R7	Operations Assessment	Medium	N/A	N/A	N/A	When making any month-end meter reading adjustments to Inadvertent Interchange, the Balancing Authority did not make the same adjustment to the PII_{accum}.

R #	Time Horizon	VRF	Violation Severity Levels			
			Lower VSL	Moderate VSL	High VSL	Severe VSL
R8	Operations Assessment	Medium	N/A	N/A	N/A	The Balancing Authority paid back Inadvertent Interchange using bilateral and unilateral payback rather than using ATEC.

Guidelines and Technical Basis

Background

In February 2003, the WECC Automatic Time Error Correction (ATEC) Procedure (Procedure) became effective for all Balancing Authorities in the Western Interconnection. The original intent of the Procedure was to minimize the number of Manual Time Error Corrections in the Western Interconnection. ATEC provides the added benefit of a superior approach over NERC Reliability Standard BAL- 004-0 – Time Error Correction for assigning costs and providing for the equitable payback of Inadvertent Interchange. In October 2006, the Procedure became a WECC Criterion. In May 2009, FERC issued Order No.723 that approved Regional Reliability Standard BAL-004-WECC-1 - Automatic Time Error Correction, as submitted by NERC. In addition, the Commission directed WECC to develop several clarifying modifications to BAL-004-WECC-1 using the FERC-approved Process for Developing and Approving WECC Standards. The Effective Date of the BAL-004-WECC-1 standard was July 1, 2009. BAL- 004-WECC-1 required Balancing Authorities within the Western Interconnection to maintain Interconnection frequency within a predefined frequency profile and to ensure that Time Error Corrections were effectively conducted in a manner that did not adversely affect the reliability of the Interconnection. In September 2009, WECC received WECC Standards/Regional Criterion Request Form (Request) WECC-0068, which was a request for modification of BAL-004-WECC-1. In July 2010, the chair of the WECC Operating Committee assigned the Request to the Performance Work Group (PWG) for development.

Requirement R1:

Premise: Each Balancing Authority should ensure that the absolute value of its PII_{accum} for both the On- Peak period and the Off-Peak period each individually does not exceed 150% of the previous year's Peak Demand for load-serving Balancing Authorities and 150% of the previous year's peak generation for generation-only Balancing Authorities. The Balancing Authority is required to keep each PII_{accum} period within the limit. For example, the Balancing Authorities actions may include:

- Identifying and correcting the source of any metering or accounting error(s) and recalculating the hourly Primary Inadvertent Interchange **(**PII_{hourly}) and the PII_{accum} from the time of the error;
- Validating the implementation of ATEC; or
- Setting L_{max} equal to $L_{10.}$until the PII_{accum} is below the limit in Requirement R1.

Justification: PII_{accum} may grow from month-end adjustments and metering errors, even with the inclusion of I_{ATEC} in the ACE equation.

Goal: To limit the amount of PII_{accum} that a Balancing Authority can have at the end of each month.

Requirement R2:

Premise: When a Balancing Authority finds an error in the calculation of its PII, the Balancing Authority needs time to correct the error and recalculate PII and PII_{accum}.

Justification: The drafting team selected 90 days as a reasonable amount of time to correct an error and recalculate PII and PII_{accum}, since recalculation of PII and PII_{accum} is not a real-time operations reliability issue.

Goal: To promote the timely correction of errors in the calculation of PII and PII_{accum}.

Requirement R3:

Premise: When a Balancing Authority is not participating in ATEC, payback of PII_{accum} is delayed.

Justification: The limit of 24 hours per quarter discourages a Balancing Authority from withdrawing ATEC participation, for example, for economic gain during selected hours. If the limits were increased to 60 hours, a Balancing Authority could technically withdraw ATEC participation for one hour from Monday to Friday.

Goal: To promote fair and timely payback of PII_{accum} balances.

Requirement R4:

Premise: $PII_{\mathbf{hourly}}$, PII_{accum}, and I_{ATEC} should be determined before the next scheduling hour begins.

Justification: To promote timely calculations 50 minutes was selected because it is before the next hour ramp begins and permits time to collect the data and resolve interchange metering values.

Goal: To promote the timely calculation of $PII_{\mathbf{hourly}}$, PII_{accum}, and I_{ATEC}.

Requirement R5:

Premise: The ACE equation, and hence the AGC mode, will contain any number of parameters based on system operating conditions. Various AGC modes are identified corresponding to those operating conditions, as well as the specific sets of parameters included in the ACE equation.

Justification: Changing to the proper operating mode, corresponding to current operating conditions, affords proper movement of generating units in response to those conditions. The addition of the ATEC term results in an additional AGC mode and a different set of parameters. The inability to correctly calculate the ATEC term would dictate that AGC not be operated in the ATEC mode.

Goal: To set the AGC mode and calculate ACE in a manner that corresponds to the system operating conditions and to accommodate changes in those conditions.

Requirement R6:

Premise: Hourly adjustments to hourly Inadvertent Interchange (II) require a recalculation of the corresponding hourly PII value, the corresponding PII_{accum}, and all subsequent PII_{accum} for every hour up to the current hour.

Justification: As $PII_{\mathbf{hourly}}$ is corrected, then PII_{accum} should be recalculated.

Goal: To promote accurate, fair and timely payback of accumulated PII balances.

Requirement R7:

Premise: Month-end meter-reading adjustments are made, for example, when a Balancing Authority performs monthly comparisons of recorded month-end Net Actual Interchange (NI_A) values derived from hourly Actual Interchange Telemetered Values against month-end Actual Interchange Register Meter readings.

Justification: Month-end adjustments to II_{accum} are applied as 100% PII_{accum}. 100% was chosen for simplicity to bilaterally assign PII_{accum} to both Balancing Authorities, since the effect of this metering error on system frequency is not easily determined over the course of a month.

Goal: To provide a mechanism by which corresponding month-end II adjustments can be **applied** to PII_{accum}, when such adjustments cannot be attributed to any one hour or series of hours.

Requirement R8:
Premise: ATEC includes automatic unilateral payback of Primary Inadvertent Interchange and Secondary Inadvertent Interchange.

Justification: Additional unilateral and bilateral exchanges disturb the balance and distribution between Primary Inadvertent Interchange and Secondary Inadvertent Interchange throughout the Interconnection; thereby stranding Secondary Inadvertent Interchange.

Goal: To not strand Secondary Inadvertent Interchange.

Version History

Version	Date	Action	Change Tracking
1	February 4, 2003	Effective Date.	New
1	October 17, 2006	Created Standard from Procedure.	Errata
1	February 6, 2007	Changed the Standard Version from 0 to 1 in the Version History Table.	Errata
1	February 6, 2007	The upper limit bounds to the amount of Automatic Time Error Correction term was inadvertently omitted during the Standard Translation. The bound was added to the requirement R1.4.	Errata
1	February 6, 2007	The statement "The Time Monitor may declare offsets in 0.001-second increments" was moved from TEoffset to TDadj and offsets was corrected to adjustments.	Errata
1	February 6, 2007	The reference to seconds was deleted from the TE offset term.	Errata
1	June 19, 2007	The standard number BAL-STD-004-1 was changed to BAL-004-WECC-01 to be consistent with the NERC Regional Reliability Standard Numbering Convention.	Errata
2	December 19, 2012	Adopted by NERC Board of Trustees.	
2	October 16, 2013	A FERC Letter Order was issued on October 16, 2013, approving BAL-004-WECC-02. This standard will become enforceable on April 1, 2014.	

Version	Date	Action	Change Tracking
3	December 6, 2017	Approved by the WECC Board of Directors.	Five-year review. The project: 1) relocates the Background section to the preamble of the Guidance section, 2) adds On-Peak and Off-Peak parameters in Requirement R1/M1, 3) addresses WECC Interchange Tool software successors throughout, 4) conforms the document to current drafting conventions (R1/M1, R4/M4), and, 5) addresses non-substantive syntax and template concerns.
3	February 8, 2018	Adopted by the NERC Board of Trustees.	
3	May 30, 2018	FERC Order issued approving BAL-004-WECC-3. Docket No. RD18-2-000	

A. Introduction

1. **Title:** Cyber Security — Security Management Controls

2. **Number:** CIP-003-7

3. **Purpose:** To specify consistent and sustainable security management controls that establish responsibility and accountability to protect BES Cyber Systems against compromise that could lead to misoperation or instability in the Bulk Electric System (BES).

4. **Applicability:**

   4.1. Functional Entities: For the purpose of the requirements contained herein, the following list of functional entities will be collectively referred to as "Responsible Entities." For requirements in this standard where a specific functional entity or subset of functional entities are the applicable entity or entities, the functional entity or entities are specified explicitly.

   4.1.1. Balancing Authority

   4.1.2. Distribution Provider that owns one or more of the following Facilities, systems, and equipment for the protection or restoration of the BES:

   4.1.2.1. Each underfrequency Load shedding (UFLS) or undervoltage Load shedding (UVLS) system that:

   4.1.2.1.1. is part of a Load shedding program that is subject to one or more requirements in a NERC or Regional Reliability Standard; and

   4.1.2.1.2. performs automatic Load shedding under a common control system owned by the Responsible Entity, without human operator initiation, of 300 MW or more.

   4.1.2.2. Each Special Protection System (SPS) or Remedial Action Scheme (RAS) where the SPS or RAS is subject to one or more requirements in a NERC or Regional Reliability Standard.

   4.1.2.3. Each Protection System (excluding UFLS and UVLS) that applies to Transmission where the Protection System is subject to one or more requirements in a NERC or Regional Reliability Standard.

   4.1.2.4. Each Cranking Path and group of Elements meeting the initial switching requirements from a Blackstart Resource up to and including the first interconnection point of the starting station service of the next generation unit(s) to be started.

   4.1.3. Generator Operator

   4.1.4. Generator Owner

   4.1.5. Interchange Coordinator or Interchange Authority

   4.1.6. Reliability Coordinator

4.1.7. Transmission Operator

4.1.8. Transmission Owner

4.2. Facilities: For the purpose of the requirements contained herein, the following Facilities, systems, and equipment owned by each Responsible Entity in Section 4.1 above are those to which these requirements are applicable. For requirements in this standard where a specific type of Facilities, system, or equipment or subset of Facilities, systems, and equipment are applicable, these are specified explicitly.

4.2.1. Distribution Provider: One or more of the following Facilities, systems and equipment owned by the Distribution Provider for the protection or restoration of the BES:

4.2.1.1. Each UFLS or UVLS System that:

4.2.1.1.1. is part of a Load shedding program that is subject to one or more requirements in a NERC or Regional Reliability Standard; and

4.2.1.1.2. performs automatic Load shedding under a common control system owned by the Responsible Entity, without human operator initiation, of 300 MW or more.

4.2.1.2. Each SPS or RAS where the SPS or RAS is subject to one or more requirements in a NERC or Regional Reliability Standard.

4.2.1.3. Each Protection System (excluding UFLS and UVLS) that applies to Transmission where the Protection System is subject to one or more requirements in a NERC or Regional Reliability Standard.

4.2.1.4. Each Cranking Path and group of Elements meeting the initial switching requirements from a Blackstart Resource up to and including the first interconnection point of the starting station service of the next generation unit(s) to be started.

4.2.2. Responsible Entities listed in 4.1 other than Distribution Providers:

All BES Facilities.

4.2.3. Exemptions: The following are exempt from Standard CIP-003-7:

4.2.3.1. Cyber Assets at Facilities regulated by the Canadian Nuclear Safety Commission.

4.2.3.2. Cyber Assets associated with communication networks and data communication links between discrete Electronic Security Perimeters (ESPs).

4.2.3.3. The systems, structures, and components that are regulated by the Nuclear Regulatory Commission under a cyber security plan pursuant to 10 C.F.R. Section 73.54.

4.2.3.4. For Distribution Providers, the systems and equipment that are not included in section 4.2.1 above.

5. Effective Dates*:

See Implementation Plan for CIP-003-7.

6. Background:

Standard CIP-003 exists as part of a suite of CIP Standards related to cyber security, which require the initial identification and categorization of BES Cyber Systems and require organizational, operational, and procedural controls to mitigate risk to BES Cyber Systems.

The term policy refers to one or a collection of written documents that are used to communicate the Responsible Entities' management goals, objectives and expectations for how the Responsible Entity will protect its BES Cyber Systems. The use of policies also establishes an overall governance foundation for creating a culture of security and compliance with laws, regulations, and standards.

The term documented processes refers to a set of required instructions specific to the Responsible Entity and to achieve a specific outcome. This term does not imply any naming or approval structure beyond what is stated in the requirements. An entity should include as much as it believes necessary in its documented processes, but it must address the applicable requirements.

The terms program and plan are sometimes used in place of documented processes where it makes sense and is commonly understood. For example, documented processes describing a response are typically referred to as plans (i.e., incident response plans and recovery plans). Likewise, a security plan can describe an approach involving multiple procedures to address a broad subject matter.

Similarly, the term program may refer to the organization's overall implementation of its policies, plans, and procedures involving a subject matter. Examples in the standards include the personnel risk assessment program and the personnel training program. The full implementation of the CIP Cyber Security Reliability Standards could also be referred to as a program. However, the terms program and plan do not imply any additional requirements beyond what is stated in the standards.

Responsible Entities can implement common controls that meet requirements for multiple high, medium, and low impact BES Cyber Systems. For example, a single cyber security awareness program could meet the requirements across multiple BES Cyber Systems.

Measures provide examples of evidence to show documentation and implementation of the requirement. These measures serve to provide guidance to entities in acceptable records of compliance and should not be viewed as an all-inclusive list.

Throughout the standards, unless otherwise stated, bulleted items in the requirements and measures are items that are linked with an "or," and numbered items are items that are linked with an "and."

Many references in the Applicability section use a threshold of 300 MW for UFLS and UVLS. This particular threshold of 300 MW for UVLS and UFLS was provided in Version 1 of the CIP Cyber Security Standards. The threshold remains at 300 MW since it is specifically addressing UVLS and UFLS, which are last ditch efforts to save the BES. A review of UFLS tolerances defined within Regional Reliability Standards for UFLS program requirements to date indicates that the historical value of 300 MW represents an adequate and reasonable threshold value for allowable UFLS operational tolerances.

B. Requirements and Measures

R1. Each Responsible Entity shall review and obtain CIP Senior Manager approval at least once every 15 calendar months for one or more documented cyber security policies that collectively address the following topics: *[Violation Risk Factor: Medium] [Time Horizon: Operations Planning]*

1.1. For its high impact and medium impact BES Cyber Systems, if any:

1.1.1. Personnel and training (CIP-004);

1.1.2. Electronic Security Perimeters (CIP-005) including Interactive Remote Access;

1.1.3. Physical security of BES Cyber Systems (CIP-006);

1.1.4. System security management (CIP-007);

1.1.5. Incident reporting and response planning (CIP-008);

1.1.6. Recovery plans for BES Cyber Systems (CIP-009);

1.1.7. Configuration change management and vulnerability assessments (CIP-010);

1.1.8. Information protection (CIP-011); and

1.1.9. Declaring and responding to CIP Exceptional Circumstances.

1.2. For its assets identified in CIP-002 containing low impact BES Cyber Systems, if any:

1.2.1. Cyber security awareness;

1.2.2. Physical security controls;

1.2.3. Electronic access controls;

1.2.4. Cyber Security Incident response;

1.2.5. Transient Cyber Assets and Removable Media malicious code risk mitigation; and

1.2.6. Declaring and responding to CIP Exceptional Circumstances.

M1. Examples of evidence may include, but are not limited to, policy documents; revision history, records of review, or workflow evidence from a document management system that indicate review of each cyber security policy at least once every 15 calendar months; and documented approval by the CIP Senior Manager for each cyber security policy.

R2. Each Responsible Entity with at least one asset identified in CIP-002 containing low impact BES Cyber Systems shall implement one or more documented cyber security plan(s) for its low impact BES Cyber Systems that include the sections in Attachment 1. *[Violation Risk Factor: Lower] [Time Horizon: Operations Planning]*

Note: An inventory, list, or discrete identification of low impact BES Cyber Systems or their BES Cyber Assets is not required. Lists of authorized users are not required.

M2. Evidence shall include each of the documented cyber security plan(s) that collectively include each of the sections in Attachment 1 and additional evidence to demonstrate implementation of the cyber security plan(s). Additional examples of evidence per section are located in Attachment 2.

R3. Each Responsible Entity shall identify a CIP Senior Manager by name and document any change within 30 calendar days of the change. *[Violation Risk Factor: Medium] [Time Horizon: Operations Planning]*

M3. An example of evidence may include, but is not limited to, a dated and approved document from a high level official designating the name of the individual identified as the CIP Senior Manager.

R4. The Responsible Entity shall implement a documented process to delegate authority, unless no delegations are used. Where allowed by the CIP Standards, the CIP Senior Manager may delegate authority for specific actions to a delegate or delegates. These delegations shall be documented, including the name or title of the delegate, the specific actions delegated, and the date of the delegation; approved by the CIP Senior Manager; and updated within 30 days of any change to the delegation. Delegation changes do not need to be reinstated with a change to the delegator. *[Violation Risk Factor: Lower] [Time Horizon: Operations Planning]*

M4. An example of evidence may include, but is not limited to, a dated document, approved by the CIP Senior Manager, listing individuals (by name or title) who are delegated the authority to approve or authorize specifically identified items.

C. Compliance

1. Compliance Monitoring Process

1.1. Compliance Enforcement Authority:

The British Columbia Utilities Commission.

1.2. Evidence Retention:

The following evidence retention periods identify the period of time an entity is required to retain specific evidence to demonstrate compliance. For instances where the evidence retention period specified below is shorter than the time since the last audit, the CEA may ask an entity to provide other evidence to show that it was compliant for the full time period since the last audit.

The Responsible Entity shall keep data or evidence to show compliance as identified below unless directed by its CEA to retain specific evidence for a longer period of time as part of an investigation:

- Each Responsible Entity shall retain evidence of each requirement in this standard for three calendar years.
- If a Responsible Entity is found non-compliant, it shall keep information related to the non-compliance until mitigation is complete and approved or for the time specified above, whichever is longer.
- The CEA shall keep the last audit records and all requested and submitted subsequent audit records.

1.3. Compliance Monitoring and Assessment Processes:

- Compliance Audits
- Self-Certifications
- Spot Checking
- Compliance Investigations
- Self-Reporting
- Complaints

1.4. Additional Compliance Information:

None.

2. Table of Compliance Elements

R #	Time Horizon	VRF	Violation Severity Levels (CIP-003-7)			
			Lower VSL	Moderate VSL	High VSL	Severe VSL
R1	**Operations Planning**	**Medium**	The Responsible Entity documented and implemented one or more cyber security policies for its high impact and medium impact BES Cyber Systems, but did not address one of the nine topics required by R1. (R1.1) OR The Responsible Entity did not complete its review of the one or more documented cyber security policies for its high impact and medium impact BES Cyber Systems as required by R1 within 15 calendar months but did	The Responsible Entity documented and implemented one or more cyber security policies for its high impact and medium impact BES Cyber Systems, but did not address two of the nine topics required by R1. (R1.1) OR The Responsible Entity did not complete its review of the one or more documented cyber security policies for its high impact and medium impact BES Cyber Systems as required by R1 within 16 calendar months but did	The Responsible Entity documented and implemented one or more cyber security policies for its high impact and medium impact BES Cyber Systems, but did not address three of the nine topics required by R1. (R1.1) OR The Responsible Entity did not complete its review of the one or more documented cyber security policies for its high impact and medium impact BES Cyber Systems as required by R1 within 17 calendar months but did complete this review in less than or equal to 18 calendar months of the	The Responsible Entity documented and implemented one or more cyber security policies for its high impact and medium impact BES Cyber Systems, but did not address four or more of the nine topics required by R1. (R1.1) OR The Responsible Entity did not have any documented cyber security policies for its high impact and medium impact BES Cyber Systems as required by R1. (R1.1) OR The Responsible

R #	Time Horizon	VRF	Violation Severity Levels (CIP-003-7)			
			Lower VSL	Moderate VSL	High VSL	Severe VSL
			complete this review in less than or equal to 16 calendar months of the previous review. (R1.1) OR The Responsible Entity did not complete its approval of the one or more documented cyber security policies for its high impact and medium impact BES Cyber Systems as required by R1 by the CIP Senior Manager within 15 calendar months but did complete this approval in less than or equal to 16 calendar months of the previous approval. (R1.1)	complete this review in less than or equal to 17 calendar months of the previous review. (R1.1) OR The Responsible Entity did not complete its approval of the one or more documented cyber security policies for its high impact and medium impact BES Cyber Systems as required by R1 by the CIP Senior Manager within 16 calendar months but did complete this approval in less than or equal to 17 calendar months of the previous approval. (R1.1)	previous review. (R1.1) OR The Responsible Entity did not complete its approval of the one or more documented cyber security policies for its high impact and medium impact BES Cyber Systems as required by R1 by the CIP Senior Manager within 17 calendar months but did complete this approval in less than or equal to 18 calendar months of the previous approval. (R1) OR The Responsible Entity documented one or more cyber security policies for its assets identified in CIP-002 containing low impact BES Cyber Systems, but	Entity did not complete its review of the one or more documented cyber security policies as required by R1 within 18 calendar months of the previous review. (R1) OR The Responsible Entity did not complete its approval of the one or more documented cyber security policies for its high impact and medium impact BES Cyber Systems as required by R1 by the CIP Senior Manager within 18 calendar months of the previous approval. (R1.1)

R #	Time Horizon	VRF	Violation Severity Levels (CIP-003-7)			
			Lower VSL	Moderate VSL	High VSL	Severe VSL
			OR The Responsible Entity documented one or more cyber security policies for its assets identified in CIP-002 containing low impact BES Cyber Systems, but did not address one of the six topics required by R1. (R1.2) OR The Responsible Entity did not complete its review of the one or more documented cyber security policies for its assets identified in CIP-002 containing low impact BES Cyber Systems as required by Requirement R1 within 15 calendar	OR The Responsible Entity documented one or more cyber security policies for its assets identified in CIP-002 containing low impact BES Cyber Systems, but did not address two of the six topics required by R1. (R1.2) OR The Responsible Entity did not complete its review of the one or more documented cyber security policies for its assets identified in CIP-002 containing low impact BES Cyber Systems as required by Requirement R1 within 16 calendar	did not address three of the six topics required by R1. (R1.2) OR The Responsible Entity did not complete its review of the one or more documented cyber security policies for its assets identified in CIP-002 containing low impact BES Cyber Systems as required by R1 within 17 calendar months but did complete this review in less than or equal to 18 calendar months of the previous review. (R1.2) OR The Responsible Entity did not complete its approval of the one or more documented cyber security policies for its assets identified in CIP-	OR The Responsible Entity documented one or more cyber security policies for its assets identified in CIP-002 containing low impact BES Cyber Systems, but did not address four or more of the six topics required by R1. (R1.2) OR The Responsible Entity did not have any documented cyber security policies for its assets identified in CIP-002 containing low impact BES Cyber Systems as required by R1. (R1.2) OR The Responsible

R #	Time Horizon	VRF	Violation Severity Levels (CIP-003-7)			
			Lower VSL	Moderate VSL	High VSL	Severe VSL
			months but did complete this review in less than or equal to 16 calendar months of the previous review. (R1.2) OR The Responsible Entity did not complete its approval of the one or more documented cyber security policies for its assets identified in CIP-002 containing low impact BES Cyber Systems as required by Requirement R1 by the CIP Senior Manager within 15 calendar months but did complete this approval in less than or equal to 16 calendar months of	months but did complete this review in less than or equal to 17 calendar months of the previous review. (R1.2) OR The Responsible Entity did not complete its approval of the one or more documented cyber security policies for its assets identified in CIP-002 containing low impact BES Cyber Systems as required by Requirement R1 by the CIP Senior Manager within 16 calendar months but did complete this approval in less than or equal to 17	002 containing low impact BES Cyber Systems as required by Requirement R1 by the CIP Senior Manager within 17 calendar months but did complete this approval in less than or equal to 18 calendar months of the previous approval. (R1.2)	Entity did not complete its approval of the one or more documented cyber security policies for its assets identified in CIP-002 containing low impact BES Cyber Systems as required by Requirement R1 by the CIP Senior Manager within 18 calendar months of the previous approval. (R1.2)

R #	Time Horizon	VRF	Violation Severity Levels (CIP-003-7)			
			Lower VSL	Moderate VSL	High VSL	Severe VSL
			the previous approval. (R1.2)	calendar months of the previous approval. (R1.2)		
R2	**Operations Planning**	**Lower**	The Responsible Entity documented its cyber security plan(s) for its assets containing low impact BES Cyber Systems, but failed to document cyber security awareness according to Requirement R2, Attachment 1, Section 1. (R2) OR The Responsible Entity implemented electronic access controls but failed to document its cyber security plan(s) for electronic access controls according to Requirement R2,	The Responsible Entity documented its cyber security plan(s) for its assets containing low impact BES Cyber Systems, but failed to reinforce cyber security practices at least once every 15 calendar months according to Requirement R2, Attachment 1, Section 1. (R2) OR The Responsible Entity documented its cyber security plan(s) for its assets containing low impact BES Cyber Systems, but failed	The Responsible Entity documented the physical access controls for its assets containing low impact BES Cyber Systems, but failed to implement the physical security controls according to Requirement R2, Attachment 1, Section 2. (R2) OR The Responsible Entity documented its cyber security plan(s) for electronic access controls for its assets containing low impact BES Cyber Systems, but failed to permit only necessary inbound and outbound electronic	The Responsible Entity failed to document and implement one or more cyber security plan(s) for its assets containing low impact BES Cyber Systems according to Requirement R2, Attachment 1. (R2)

R #	Time Horizon	VRF	Violation Severity Levels (CIP-003-7)			
			Lower VSL	Moderate VSL	High VSL	Severe VSL
			Attachment 1, Section 3. (R2) OR The Responsible Entity documented its cyber security plan(s) for its assets containing low impact BES Cyber Systems, but failed to document one or more Cyber Security Incident response plan(s) according to Requirement R2, Attachment 1, Section 4. (R2) OR The Responsible Entity documented one or more Cyber Security Incident response plan(s) within its cyber security plan(s) for its assets containing	to document physical security controls according to Requirement R2, Attachment 1, Section 2. (R2) OR The Responsible Entity documented its cyber security plan(s) for its assets containing low impact BES Cyber Systems, but failed to document electronic access controls according to Requirement R2, Attachment 1, Section 3. (R2) OR The Responsible Entity documented its cyber security plan(s) for electronic access controls but	access controls according to Requirement R2, Attachment 1, Section 3.1. (R2) OR The Responsible Entity documented one or more Cyber Security Incident response plan(s) within its cyber security plan(s) for its assets containing low impact BES Cyber Systems, but failed to test each Cyber Security Incident response plan(s) at least once every 36 calendar months according to Requirement R2, Attachment 1, Section 4. (R2) OR The Responsible Entity documented the determination of	

R #	Time Horizon	VRF	Violation Severity Levels (CIP-003-7)			
			Lower VSL	Moderate VSL	High VSL	Severe VSL
			low impact BES Cyber Systems, but failed to update each Cyber Security Incident response plan(s) within 180 days according to Requirement R2, Attachment 1, Section 4. (R2) OR The Responsible Entity documented its plan(s) for Transient Cyber Assets and Removable Media, but failed to manage its Transient Cyber Asset(s) according to Requirement R2, Attachment 1, Section 5.1. (R2) OR The Responsible Entity documented	failed to implement authentication for all Dial-up Connectivity that provides access to low impact BES Cyber System(s), per Cyber Asset capability according to Requirement R2, Attachment 1, Section 3.2 (R2) OR The Responsible Entity documented one or more incident response plan(s) within its cyber security plan(s) for its assets containing low impact BES Cyber Systems, but failed to include the process for identification, classification, and response to Cyber Security Incidents	whether an identified Cyber Security Incident is a Reportable Cyber Security Incident, but failed to notify the Electricity Information Sharing and Analysis Center (E-ISAC) according to Requirement R2, Attachment 1, Section 4. (R2) OR The Responsible Entity documented its plan(s) for Transient Cyber Assets and Removable Media, but failed to implement mitigation for the introduction of malicious code for Transient Cyber Assets managed by the Responsible Entity according to Requirement R2, Attachment 1, Section	

R #	Time Horizon	VRF	Violation Severity Levels (CIP-003-7)			
			Lower VSL	Moderate VSL	High VSL	Severe VSL
			its plan(s) for Transient Cyber Assets, but failed to document the Removable Media section(s) according to Requirement R2, Attachment 1, Section 5.3. (R2)	according to Requirement R2, Attachment 1, Section 4. (R2) OR The Responsible Entity documented its cyber security plan(s) for its assets containing low impact BES Cyber Systems, but failed to document the determination of whether an identified Cyber Security Incident is a Reportable Cyber Security Incident and subsequent notification to the Electricity Information Sharing and Analysis Center (E-ISAC) according to Requirement R2, Attachment 1,	5.1. (R2) OR The Responsible Entity documented its plan(s) for Transient Cyber Assets and Removable Media, but failed to implement mitigation for the introduction of malicious code for Transient Cyber Assets managed by a party other than the Responsible Entity according to Requirement R2, Attachment 1, Section 5.2. (R2) OR The Responsible Entity documented its plan(s) for Transient Cyber Assets and Removable Media, but failed to implement mitigation for the threat of detected	

R #	Time Horizon	VRF	Violation Severity Levels (CIP-003-7)			
			Lower VSL	Moderate VSL	High VSL	Severe VSL
				Section 4. (R2) OR The Responsible Entity documented its plan(s) for Transient Cyber Assets and Removable Media, but failed to document mitigation for the introduction of malicious code for Transient Cyber Assets managed by the Responsible Entity according to Requirement R2, Attachment 1, Sections 5.1 and 5.3. (R2) OR The Responsible Entity documented its plan(s) for Transient Cyber Assets and	malicious code on the Removable Media prior to connecting Removable Media to a low impact BES Cyber System according to Requirement R2, Attachment 1, Section 5.3. (R2)	

R #	Time Horizon	VRF	Violation Severity Levels (CIP-003-7)			
			Lower VSL	Moderate VSL	High VSL	Severe VSL
				Removable Media, but failed to document mitigation for the introduction of malicious code for Transient Cyber Assets managed by a party other than the Responsible Entity according to Requirement R2, Attachment 1, Section 5.2. (R2) OR The Responsible Entity documented its plan(s) for Transient Cyber Assets and Removable Media, but failed to implement the Removable Media section(s) according to Requirement R2, Attachment 1, Section 5.3. (R2)		

R #	Time Horizon	VRF	Violation Severity Levels (CIP-003-7)			
			Lower VSL	Moderate VSL	High VSL	Severe VSL
R3	**Operations Planning**	**Medium**	The Responsible Entity has identified by name a CIP Senior Manager, but did not document changes to the CIP Senior Manager within 30 calendar days but did document this change in less than 40 calendar days of the change. (R3)	The Responsible Entity has identified by name a CIP Senior Manager, but did not document changes to the CIP Senior Manager within 40 calendar days but did document this change in less than 50 calendar days of the change. (R3)	The Responsible Entity has identified by name a CIP Senior Manager, but did not document changes to the CIP Senior Manager within 50 calendar days but did document this change in less than 60 calendar days of the change. (R3)	The Responsible Entity has not identified, by name, a CIP Senior Manager. OR The Responsible Entity has identified by name a CIP Senior Manager, but did not document changes to the CIP Senior Manager within 60 calendar days of the change. (R3)
R4	**Operations Planning**	**Lower**	The Responsible Entity has identified a delegate by name, title, date of delegation, and specific actions delegated, but did not document changes to the delegate within 30	The Responsible Entity has identified a delegate by name, title, date of delegation, and specific actions delegated, but did not document changes to the delegate within 40	The Responsible Entity has identified a delegate by name, title, date of delegation, and specific actions delegated, but did not document changes to the delegate within 50 calendar days but did document this change in less than 60	The Responsible Entity has used delegated authority for actions where allowed by the CIP Standards, but does not have a process to delegate actions from the CIP Senior

R #	Time Horizon	VRF	Violation Severity Levels (CIP-003-7)			
			Lower VSL	Moderate VSL	High VSL	Severe VSL
			calendar days but did document this change in less than 40 calendar days of the change. (R4)	calendar days but did document this change in less than 50 calendar days of the change. (R4)	calendar days of the change. (R4)	Manager. (R4) OR The Responsible Entity has identified a delegate by name, title, date of delegation, and specific actions delegated, but did not document changes to the delegate within 60 calendar days of the change. (R4)

D. Regional Variances

None.

E. Interpretations

None.

F. Associated Documents

None.

Version History

Version	Date	Action	Change Tracking
1	1/16/06	R3.2 — Change "Control Center" to "control center."	3/24/06
2	9/30/09	Modifications to clarify the requirements and to bring the compliance elements into conformance with the latest guidelines for developing compliance elements of standards. Removal of reasonable business judgment. Replaced the RRO with the RE as a responsible entity. Rewording of Effective Date. Changed compliance monitor to Compliance Enforcement Authority.	
3	12/16/09	Updated Version Number from -2 to -3 In Requirement 1.6, deleted the sentence pertaining to removing component or system from service in order to perform testing, in response to FERC order issued September 30, 2009.	
3	12/16/09	Approved by the NERC Board of Trustees.	
3	3/31/10	Approved by FERC.	
4	1/24/11	Approved by the NERC Board of Trustees.	
5	11/26/12	Adopted by the NERC Board of Trustees.	Modified to coordinate with other CIP standards and to revise format to use RBS Template.
5	11/22/13	FERC Order issued approving CIP-003-5.	

Version	Date	Action	Change Tracking
6	11/13/14	Adopted by the NERC Board of Trustees.	Addressed two FERC directives from Order No. 791 related to identify, assess, and correct language and communication networks.
6	2/12/15	Adopted by the NERC Board of Trustees.	Replaces the version adopted by the Board on 11/13/2014. Revised version addresses remaining directives from Order No. 791 related to transient devices and low impact BES Cyber Systems.
6	1/21/16	FERC Order issued approving CIP-003-6. Docket No. RM15-14-000	
7	2/9/17	Adopted by the NERC Board of Trustees.	Revised to address FERC Order No. 822 directives regarding (1) the definition of LERC and (2) transient devices.
7	4/19/18	FERC Order issued approving CIP-003-7. Docket No. RM17-11-000	

Attachment 1

Required Sections for Cyber Security Plan(s) for Assets Containing Low Impact BES Cyber Systems

Responsible Entities shall include each of the sections provided below in the cyber security plan(s) required under Requirement R2.

Responsible Entities with multiple-impact BES Cyber Systems ratings can utilize policies, procedures, and processes for their high or medium impact BES Cyber Systems to fulfill the sections for the development of low impact cyber security plan(s). Each Responsible Entity can develop a cyber security plan(s) either by individual asset or groups of assets.

Section 1. Cyber Security Awareness: Each Responsible Entity shall reinforce, at least once every 15 calendar months, cyber security practices (which may include associated physical security practices).

Section 2. Physical Security Controls: Each Responsible Entity shall control physical access, based on need as determined by the Responsible Entity, to (1) the asset or the locations of the low impact BES Cyber Systems within the asset, and (2) the Cyber Asset(s), as specified by the Responsible Entity, that provide electronic access control(s) implemented for Section 3.1, if any.

Section 3. Electronic Access Controls: For each asset containing low impact BES Cyber System(s) identified pursuant to CIP-002, the Responsible Entity shall implement electronic access controls to:

3.1 Permit only necessary inbound and outbound electronic access as determined by the Responsible Entity for any communications that are:

i. between a low impact BES Cyber System(s) and a Cyber Asset(s) outside the asset containing low impact BES Cyber System(s);

ii. using a routable protocol when entering or leaving the asset containing the low impact BES Cyber System(s); and

iii. not used for time-sensitive protection or control functions between intelligent electronic devices (e.g., communications using protocol IEC TR-61850-90-5 R-GOOSE).

3.2 Authenticate all Dial-up Connectivity, if any, that provides access to low impact BES Cyber System(s), per Cyber Asset capability.

Section 4. Cyber Security Incident Response: Each Responsible Entity shall have one or more Cyber Security Incident response plan(s), either by asset or group of assets, which shall include:

4.1 Identification, classification, and response to Cyber Security Incidents;

4.2 Determination of whether an identified Cyber Security Incident is a Reportable Cyber Security Incident and subsequent notification to the

Electricity Information Sharing and Analysis Center (E-ISAC), unless prohibited by law;

4.3 Identification of the roles and responsibilities for Cyber Security Incident response by groups or individuals;

4.4 Incident handling for Cyber Security Incidents;

4.5 Testing the Cyber Security Incident response plan(s) at least once every 36 calendar months by: (1) responding to an actual Reportable Cyber Security Incident; (2) using a drill or tabletop exercise of a Reportable Cyber Security Incident; or (3) using an operational exercise of a Reportable Cyber Security Incident; and

4.6 Updating the Cyber Security Incident response plan(s), if needed, within 180 calendar days after completion of a Cyber Security Incident response plan(s) test or actual Reportable Cyber Security Incident.

Section 5. Transient Cyber Asset and Removable Media Malicious Code Risk Mitigation: Each Responsible Entity shall implement, except under CIP Exceptional Circumstances, one or more plan(s) to achieve the objective of mitigating the risk of the introduction of malicious code to low impact BES Cyber Systems through the use of Transient Cyber Assets or Removable Media. The plan(s) shall include:

5.1 For Transient Cyber Asset(s) managed by the Responsible Entity, if any, the use of one or a combination of the following in an ongoing or on-demand manner (per Transient Cyber Asset capability):

- Antivirus software, including manual or managed updates of signatures or patterns;
- Application whitelisting; or
- Other method(s) to mitigate the introduction of malicious code.

5.2 For Transient Cyber Asset(s) managed by a party other than the Responsible Entity, if any, the use of one or a combination of the following prior to connecting the Transient Cyber Asset to a low impact BES Cyber System (per Transient Cyber Asset capability):

- Review of antivirus update level;
- Review of antivirus update process used by the party;
- Review of application whitelisting used by the party;
- Review use of live operating system and software executable only from read-only media;
- Review of system hardening used by the party; or
- Other method(s) to mitigate the introduction of malicious code.

5.3 For Removable Media, the use of each of the following:

5.3.1 Method(s) to detect malicious code on Removable Media using a Cyber Asset other than a BES Cyber System; and

5.3.2 Mitigation of the threat of detected malicious code on the Removable Media prior to connecting Removable Media to a low impact BES Cyber System.

Attachment 2

Examples of Evidence for Cyber Security Plan(s) for Assets Containing Low Impact BES Cyber Systems

Section 1. Cyber Security Awareness: An example of evidence for Section 1 may include, but is not limited to, documentation that the reinforcement of cyber security practices occurred at least once every 15 calendar months. The evidence could be documentation through one or more of the following methods:

- Direct communications (for example, e-mails, memos, or computer-based training);
- Indirect communications (for example, posters, intranet, or brochures); or
- Management support and reinforcement (for example, presentations or meetings).

Section 2. Physical Security Controls: Examples of evidence for Section 2 may include, but are not limited to:

- Documentation of the selected access control(s) (e.g., card key, locks, perimeter controls), monitoring controls (e.g., alarm systems, human observation), or other operational, procedural, or technical physical security controls that control physical access to both:
  a. The asset, if any, or the locations of the low impact BES Cyber Systems within the asset; and
  b. The Cyber Asset(s) specified by the Responsible Entity that provide(s) electronic access controls implemented for Attachment 1, Section 3.1, if any.

Section 3. Electronic Access Controls: Examples of evidence for Section 3 may include, but are not limited to:

1. Documentation showing that at each asset or group of assets containing low impact BES Cyber Systems, routable communication between a low impact BES Cyber System(s) and a Cyber Asset(s) outside the asset is restricted by electronic access controls to permit only inbound and outbound electronic access that the Responsible Entity deems necessary, except where an entity provides rationale that communication is used for time-sensitive protection or control functions between intelligent electronic devices. Examples of such documentation may include, but are not limited to representative diagrams that illustrate control of inbound and outbound communication(s) between the low impact BES Cyber System(s) and a Cyber Asset(s) outside the asset containing low impact BES Cyber System(s) or lists of implemented electronic access controls (e.g., access control lists restricting IP addresses, ports, or services; implementing unidirectional gateways).

2. Documentation of authentication for Dial-up Connectivity (e.g., dial out only to a preprogrammed number to deliver data, dial-back modems, modems that must be remotely controlled by the control center or control room, or access control on the BES Cyber System).

Section 4. Cyber Security Incident Response: An example of evidence for Section 4 may include, but is not limited to, dated documentation, such as policies, procedures, or process documents of one or more Cyber Security Incident response plan(s) developed either by asset or group of assets that include the following processes:

1. to identify, classify, and respond to Cyber Security Incidents; to determine whether an identified Cyber Security Incident is a Reportable Cyber Security Incident and for notifying the Electricity Information Sharing and Analysis Center (E-ISAC);
2. to identify and document the roles and responsibilities for Cyber Security Incident response by groups or individuals (e.g., initiating, documenting, monitoring, reporting, etc.);
3. for incident handling of a Cyber Security Incident (e.g., containment, eradication, or recovery/incident resolution);
4. for testing the plan(s) along with the dated documentation that a test has been completed at least once every 36 calendar months; and
5. to update, as needed, Cyber Security Incident response plan(s) within 180 calendar days after completion of a test or actual Reportable Cyber Security Incident.

Section 5. Transient Cyber Asset and Removable Media Malicious Code Risk Mitigation:

1. Examples of evidence for Section 5.1 may include, but are not limited to, documentation of the method(s) used to mitigate the introduction of malicious code such as antivirus software and processes for managing signature or pattern updates, application whitelisting practices, processes to restrict communication, or other method(s) to mitigate the introduction of malicious code. If a Transient Cyber Asset does not have the capability to use method(s) that mitigate the introduction of malicious code, evidence may include documentation by the vendor or Responsible Entity that identifies that the Transient Cyber Asset does not have the capability.
2. Examples of evidence for Section 5.2 may include, but are not limited to, documentation from change management systems, electronic mail or procedures that document a review of the installed antivirus update level; memoranda, electronic mail, system documentation, policies or contracts from the party other than the Responsible Entity that identify the antivirus update process, the use of application whitelisting, use of live operating systems or system hardening performed by the party other than the Responsible Entity; evidence from change management systems, electronic mail or contracts that

identifies the Responsible Entity's acceptance that the practices of the party other than the Responsible Entity are acceptable; or documentation of other method(s) to mitigate malicious code for Transient Cyber Asset(s) managed by a party other than the Responsible Entity. If a Transient Cyber Asset does not have the capability to use method(s) that mitigate the introduction of malicious code, evidence may include documentation by the Responsible Entity or the party other than the Responsible Entity that identifies that the Transient Cyber Asset does not have the capability

3. Examples of evidence for Section 5.3.1 may include, but are not limited to, documented process(es) of the method(s) used to detect malicious code such as results of scan settings for Removable Media, or implementation of on-demand scanning. Examples of evidence for Section 5.3.2 may include, but are not limited to, documented process(es) for the method(s) used for mitigating the threat of detected malicious code on Removable Media, such as logs from the method(s) used to detect malicious code that show the results of scanning and the mitigation of detected malicious code on Removable Media or documented confirmation by the entity that the Removable Media was deemed to be free of malicious code.

Guidelines and Technical Basis

Section 4 – Scope of Applicability of the CIP Cyber Security Standards

Section "4. Applicability" of the standards provides important information for Responsible Entities to determine the scope of the applicability of the CIP Cyber Security Requirements.

Section "4.1. Functional Entities" is a list of NERC functional entities to which the standard applies. If the entity is registered as one or more of the functional entities listed in Section 4.1, then the NERC CIP Cyber Security Standards apply. Note that there is a qualification in Section 4.1 that restricts the applicability in the case of Distribution Providers to only those that own certain types of systems and equipment listed in 4.2.

Section "4.2. Facilities" defines the scope of the Facilities, systems, and equipment owned by the Responsible Entity, as qualified in Section 4.1, that is subject to the requirements of the standard. In addition to the set of BES Facilities, Control Centers, and other systems and equipment, the list includes the set of systems and equipment owned by Distribution Providers. While the NERC Glossary term "Facilities" already includes the BES characteristic, the additional use of the term BES here is meant to reinforce the scope of applicability of these Facilities where it is used, especially in this applicability scoping section. This in effect sets the scope of Facilities, systems, and equipment that is subject to the standards.

Requirement R1:

In developing policies in compliance with Requirement R1, the number of policies and their content should be guided by a Responsible Entity's management structure and operating conditions. Policies might be included as part of a general information security program for the entire organization, or as components of specific programs. The Responsible Entity has the flexibility to develop a single comprehensive cyber security policy covering the required topics, or it may choose to develop a single high-level umbrella policy and provide additional policy detail in lower level documents in its documentation hierarchy. In the case of a high-level umbrella policy, the Responsible Entity would be expected to provide the high-level policy as well as the additional documentation in order to demonstrate compliance with CIP-003-7, Requirement R1.

If a Responsible Entity has any high or medium impact BES Cyber Systems, the one or more cyber security policies must cover the nine subject matter areas required by CIP-003-7, Requirement R1, Part 1.1. If a Responsible Entity has identified from CIP-002 any assets containing low impact BES Cyber Systems, the one or more cyber security policies must cover the six subject matter areas required by Requirement R1, Part 1.2.

Responsible Entities that have multiple-impact rated BES Cyber Systems are not required to create separate cyber security policies for high, medium, or low impact BES Cyber Systems. The Responsible Entities have the flexibility to develop policies that cover all three impact ratings.

Implementation of the cyber security policy is not specifically included in CIP-003-7, Requirement R1 as it is envisioned that the implementation of this policy is evidenced through successful implementation of CIP-003 through CIP-011. However, Responsible Entities are encouraged not to limit the scope of their cyber security policies to only those requirements in NERC cyber security Reliability Standards, but to develop a holistic cyber security policy

appropriate for its organization. Elements of a policy that extend beyond the scope of NERC's cyber security Reliability Standards will not be considered candidates for potential violations although they will help demonstrate the organization's internal culture of compliance and posture towards cyber security.

For Part 1.1, the Responsible Entity may consider the following for each of the required topics in its one or more cyber security policies for medium and high impact BES Cyber Systems, if any:

1.1.1 Personnel and training (CIP-004)

- Organization position on acceptable background investigations
- Identification of possible disciplinary action for violating this policy
- Account management

1.1.2 Electronic Security Perimeters (CIP-005) including Interactive Remote Access

- Organization stance on use of wireless networks
- Identification of acceptable authentication methods
- Identification of trusted and untrusted resources
- Monitoring and logging of ingress and egress at Electronic Access Points
- Maintaining up-to-date anti-malware software before initiating Interactive Remote Access
- Maintaining up-to-date patch levels for operating systems and applications used to initiate Interactive Remote Access
- Disabling VPN "split-tunneling" or "dual-homed" workstations before initiating Interactive Remote Access
- For vendors, contractors, or consultants: include language in contracts that requires adherence to the Responsible Entity's Interactive Remote Access controls

1.1.3 Physical security of BES Cyber Systems (CIP-006)

- Strategy for protecting Cyber Assets from unauthorized physical access
- Acceptable physical access control methods
- Monitoring and logging of physical ingress

1.1.4 System security management (CIP-007)

- Strategies for system hardening
- Acceptable methods of authentication and access control
- Password policies including length, complexity, enforcement, prevention of brute force attempts
- Monitoring and logging of BES Cyber Systems

1.1.5 Incident reporting and response planning (CIP-008)

- Recognition of Cyber Security Incidents
- Appropriate notifications upon discovery of an incident
- Obligations to report Cyber Security Incidents

1.1.6 Recovery plans for BES Cyber Systems (CIP-009)

- Availability of spare components
- Availability of system backups

1.1.7 Configuration change management and vulnerability assessments (CIP-010)

- Initiation of change requests
- Approval of changes
- Break-fix processes

1.1.8 Information protection (CIP-011)

- Information access control methods
- Notification of unauthorized information disclosure
- Information access on a need-to-know basis

1.1.9 Declaring and responding to CIP Exceptional Circumstances

- Processes to invoke special procedures in the event of a CIP Exceptional Circumstance
- Processes to allow for exceptions to policy that do not violate CIP requirements

For Part 1.2, the Responsible Entity may consider the following for each of the required topics in its one or more cyber security policies for assets containing low impact BES Cyber Systems, if any:

1.2.1 Cyber security awareness

- Method(s) for delivery of security awareness
- Identification of groups to receive cyber security awareness

1.2.2 Physical security controls

- Acceptable approach(es) for selection of physical security control(s)

1.2.3 Electronic access controls

- Acceptable approach(es) for selection of electronic access control(s)

1.2.4 Cyber Security Incident response

- Recognition of Cyber Security Incidents

- Appropriate notifications upon discovery of an incident
- Obligations to report Cyber Security Incidents

1.2.5 Transient Cyber Assets and Removable Media Malicious Code Risk Mitigation

- Acceptable use of Transient Cyber Asset(s) and Removable Media
- Method(s) to mitigate the risk of the introduction of malicious code to low impact BES Cyber Systems from Transient Cyber Assets and Removable Media
- Method(s) to request Transient Cyber Asset and Removable Media

1.2.6 Declaring and responding to CIP Exceptional Circumstances

- Process(es) to declare a CIP Exceptional Circumstance
- Process(es) to respond to a declared CIP Exceptional Circumstance

Requirements relating to exceptions to a Responsible Entity's security policies were removed because it is a general management issue that is not within the scope of a reliability requirement. It is an internal policy requirement and not a reliability requirement. However, Responsible Entities are encouraged to continue this practice as a component of their cyber security policies.

In this and all subsequent required approvals in the NERC CIP Reliability Standards, the Responsible Entity may elect to use hardcopy or electronic approvals to the extent that there is sufficient evidence to ensure the authenticity of the approving party.

Requirement R2:

The intent of Requirement R2 is for each Responsible Entity to create, document, and implement one or more cyber security plan(s) that address the security objective for the protection of low impact BES Cyber Systems. The required protections are designed to be part of a program that covers the low impact BES Cyber Systems collectively at an asset level (based on the list of assets containing low impact BES Cyber Systems identified in CIP-002), but not at an individual device or system level.

Requirement R2, Attachment 1

As noted, Attachment 1 contains the sections that must be included in the cyber security plan(s). The intent is to allow entities that have a combination of high, medium, and low impact BES Cyber Systems the flexibility to choose, if desired, to cover their low impact BES Cyber Systems (or any subset) under their programs used for the high or medium impact BES Cyber Systems rather than maintain two separate programs. The purpose of the cyber security plan(s) in Requirement R2 is for Responsible Entities to use the cyber security plan(s) as a means of documenting their approaches to meeting the subject matter areas. The cyber security plan(s) can be used to reference other policies and procedures that demonstrate "how" the Responsible Entity is meeting each of the subject matter areas, or Responsible Entities can develop comprehensive cyber security plan(s) that contain all of the detailed implementation content solely within the cyber security plan itself. To meet the obligation for the cyber security plan, the expectation is that the cyber security plan contains or references sufficient details to address the implementation of each of the required subject matters areas.

Guidance for each of the subject matter areas of Attachment 1 is provided below.

Requirement R2, Attachment 1, Section 1 – Cyber Security Awareness

The intent of the cyber security awareness program is for entities to reinforce good cyber security practices with their personnel at least once every 15 calendar months. The entity has the discretion to determine the topics to be addressed and the manner in which it will communicate these topics. As evidence of compliance, the Responsible Entity should be able to produce the awareness material that was delivered according to the delivery method(s) (e.g., posters, emails, or topics at staff meetings, etc.). The standard drafting team does not intend for Responsible Entities to be required to maintain lists of recipients and track the reception of the awareness material by personnel.

Although the focus of the awareness is cyber security, it does not mean that only technology-related topics can be included in the program. Appropriate physical security topics (e.g., tailgating awareness and protection of badges for physical security, or "If you see something, say something" campaigns, etc.) are valid for cyber security awareness. The intent is to cover topics concerning any aspect of the protection of BES Cyber Systems.

Requirement R2, Attachment 1, Section 2 – Physical Security Controls

The Responsible Entity must document and implement methods to control physical access to (1) the asset or the locations of low impact BES Cyber Systems within the asset, and (2) Cyber Assets that implement the electronic access control(s) specified by the Responsible Entity in Attachment 1, Section 3.1, if any. If these Cyber Assets implementing the electronic access controls are located within the same asset as the low impact BES Cyber Asset(s) and inherit the same physical access controls and the same need as outlined in Section 2, this may be noted by the Responsible Entity in either its policies or cyber security plan(s) to avoid duplicate documentation of the same controls.

The Responsible Entity has the flexibility to select the methods used to meet the objective of controlling physical access to (1) the asset(s) containing low impact BES Cyber System(s) or the low impact BES Cyber Systems themselves and (2) the electronic access control Cyber Assets specified by the Responsible Entity, if any. The Responsible Entity may use one or a

combination of physical access controls, monitoring controls, or other operational, procedural, or technical physical security controls. Entities may use perimeter controls (e.g., fences with locked gates, guards, or site access policies, etc.) or more granular areas of physical access control in areas where low impact BES Cyber Systems are located, such as control rooms or control houses.

The security objective is to control the physical access based on need as determined by the Responsible Entity. The need for physical access can be documented at the policy level. The standard drafting team did not intend to obligate an entity to specify a need for each physical access or authorization of an individual for physical access.

Monitoring as a physical security control can be used as a complement or an alternative to physical access control. Examples of monitoring controls include, but are not limited to: (1) alarm systems to detect motion or entry into a controlled area, or (2) human observation of a controlled area. Monitoring does not necessarily require logging and maintaining logs but could include monitoring that physical access has occurred or been attempted (e.g., door alarm, or human observation, etc.). The standard drafting team's intent is that the monitoring does not need to be per low impact BES Cyber System but should be at the appropriate level to meet the security objective of controlling physical access.

User authorization programs and lists of authorized users for physical access are not required although they are an option to meet the security objective.

Requirement R2, Attachment 1, Section 3 – Electronic Access Controls

Section 3 requires the establishment of electronic access controls for assets containing low impact BES Cyber Systems when there is routable protocol communication or Dial-up Connectivity between Cyber Asset(s) outside of the asset containing the low impact BES Cyber System(s) and the low impact BES Cyber System(s) within such asset. The establishment of electronic access controls is intended to reduce the risks associated with uncontrolled communication using routable protocols or Dial-up Connectivity.

When implementing Attachment 1, Section 3.1, Responsible Entities should note that electronic access controls to permit only necessary inbound and outbound electronic access are required for communications when those communications meet all three of the criteria identified in Attachment 1, Section 3.1. The Responsible Entity should evaluate the communications and when all three criteria are met, the Responsible Entity must document and implement electronic access control(s).

When identifying electronic access controls, Responsible Entities are provided flexibility in the selection of the electronic access controls that meet their operational needs while meeting the security objective of allowing only necessary inbound and outbound electronic access to low impact BES Cyber Systems that use routable protocols between a low impact BES Cyber System(s) and Cyber Asset(s) outside the asset.

In essence, the intent is for Responsible Entities to determine whether there is communication between a low impact BES Cyber System(s) and a Cyber Asset(s) outside the asset containing low impact BES Cyber System(s) that uses a routable protocol when entering or leaving the asset or Dial-up Connectivity to the low impact BES Cyber System(s). Where such

communication is present, Responsible Entities should document and implement electronic access control(s). Where routable protocol communication for time-sensitive protection or control functions between intelligent electronic devices that meets the exclusion language is present, Responsible Entities should document that communication, but are not required to establish any specific electronic access controls.

The inputs to this requirement are the assets identified in CIP-002 as containing low impact BES Cyber System(s); therefore, the determination of routable protocol communications or Dial-up Connectivity is an attribute of the asset. However, it is not intended for communication that provides no access to or from the low impact BES Cyber System(s), but happens to be located at the asset with the low impact BES Cyber System(s), to be evaluated for electronic access controls.

Electronic Access Control Exclusion

In order to avoid future technology issues, the obligations for electronic access controls exclude communications between intelligent electronic devices that use routable communication protocols for time-sensitive protection or control functions, such as IEC TR-61850-90-5 R-GOOSE messaging. Time-sensitive in this context generally means functions that would be negatively impacted by the latency introduced in the communications by the required electronic access controls. This time-sensitivity exclusion does not apply to SCADA communications which typically operate on scan rates of 2 seconds or greater. While technically time-sensitive, SCADA communications over routable protocols can withstand the delay introduced by electronic access controls. Examples of excluded time-sensitive communications are those communications which may necessitate the tripping of a breaker within a few cycles. A Responsible Entity using this technology is not expected to implement the electronic access controls noted herein. This exception was included so as not to inhibit the functionality of the time-sensitive characteristics related to this technology and not to preclude the use of such time-sensitive reliability enhancing functions if they use a routable protocol in the future.

Considerations for Determining Routable Protocol Communications

To determine whether electronic access controls need to be implemented, the Responsible Entity has to determine whether there is communication between a low impact BES Cyber System(s) and a Cyber Asset(s) outside the asset containing the low impact BES Cyber System(s) that uses a routable protocol when entering or leaving the asset.

When determining whether a routable protocol is entering or leaving the asset containing the low impact BES Cyber System(s), Responsible Entities have flexibility in identifying an approach. One approach is for Responsible Entities to identify an “electronic boundary” associated with the asset containing low impact BES Cyber System(s). This is not an Electronic Security Perimeter *per se*, but a demarcation that demonstrates the routable protocol communication entering or leaving the asset between a low impact BES Cyber System and Cyber Asset(s) outside the asset to then have electronic access controls implemented. This electronic boundary may vary by asset type (Control Center, substation, generation resource) and the specific configuration of the asset. If this approach is used, the intent is for the Responsible Entity to define the electronic boundary such that the low impact BES Cyber System(s) located

at the asset are contained within the "electronic boundary." This is strictly for determining which routable protocol communications and networks are internal or inside or local to the asset and which are external to or outside the asset.

Alternatively, the Responsible Entity may find the concepts of what is inside and outside to be intuitively obvious for a Cyber Asset(s) outside the asset containing low impact BES Cyber System(s) communicating to a low impact BES Cyber System(s) inside the asset. This may be the case when a low impact BES Cyber System(s) is communicating with a Cyber Asset many miles away and a clear and unambiguous demarcation exists. In this case, a Responsible Entity may decide not to identify an "electronic boundary," but rather to simply leverage the unambiguous asset demarcation to ensure that the electronic access controls are placed between the low impact BES Cyber System(s) and the Cyber Asset(s) outside the asset.

Determining Electronic Access Controls

Once a Responsible Entity has determined that there is routable communication between a low impact BES Cyber System(s) and a Cyber Asset(s) outside the asset containing the low impact BES Cyber System(s) that uses a routable protocol when entering or leaving the asset containing the low impact BES Cyber System(s), the intent is for the Responsible Entity to document and implement its chosen electronic access control(s). The control(s) are intended to allow only "necessary" inbound and outbound electronic access as determined by the Responsible Entity. However the Responsible Entity chooses to document the inbound and outbound access permissions and the need, the intent is that the Responsible Entity is able to explain the reasons for the electronic access permitted. The reasoning for "necessary" inbound and outbound electronic access controls may be documented within the Responsible Entity's cyber security plan(s), within a comment on an access control list, a database, spreadsheet or other policies or procedures associated with the electronic access controls.

Concept Diagrams

The diagrams on the following pages are provided as examples to illustrate various electronic access controls at a conceptual level. Regardless of the concepts or configurations chosen by the Responsible Entity, the intent is to achieve the security objective of permitting only necessary inbound and outbound electronic access for communication between low impact BES Cyber Systems and Cyber Asset(s) outside the asset containing the low impact BES Cyber System(s) using a routable protocol when entering or leaving the asset.

NOTE:

- This is not an exhaustive list of applicable concepts.
- The same legend is used in each diagram; however, the diagram may not contain all of the articles represented in the legend.

Reference Model 1 – Host-based Inbound & Outbound Access Permissions

The Responsible Entity may choose to utilize a host-based firewall technology on the low impact BES Cyber System(s) itself that manages the inbound and outbound electronic access permissions so that only necessary inbound and outbound electronic access is allowed between the low impact BES Cyber System(s) and the Cyber Asset(s) outside the asset containing the low impact BES Cyber System(s). When permitting the inbound and outbound electronic access permissions using access control lists, the Responsible Entity could restrict communication(s) using source and destination addresses or ranges of addresses. Responsible Entities could also restrict communication(s) using ports or services based on the capability of the electronic access control, the low impact BES Cyber System(s), or the application(s).

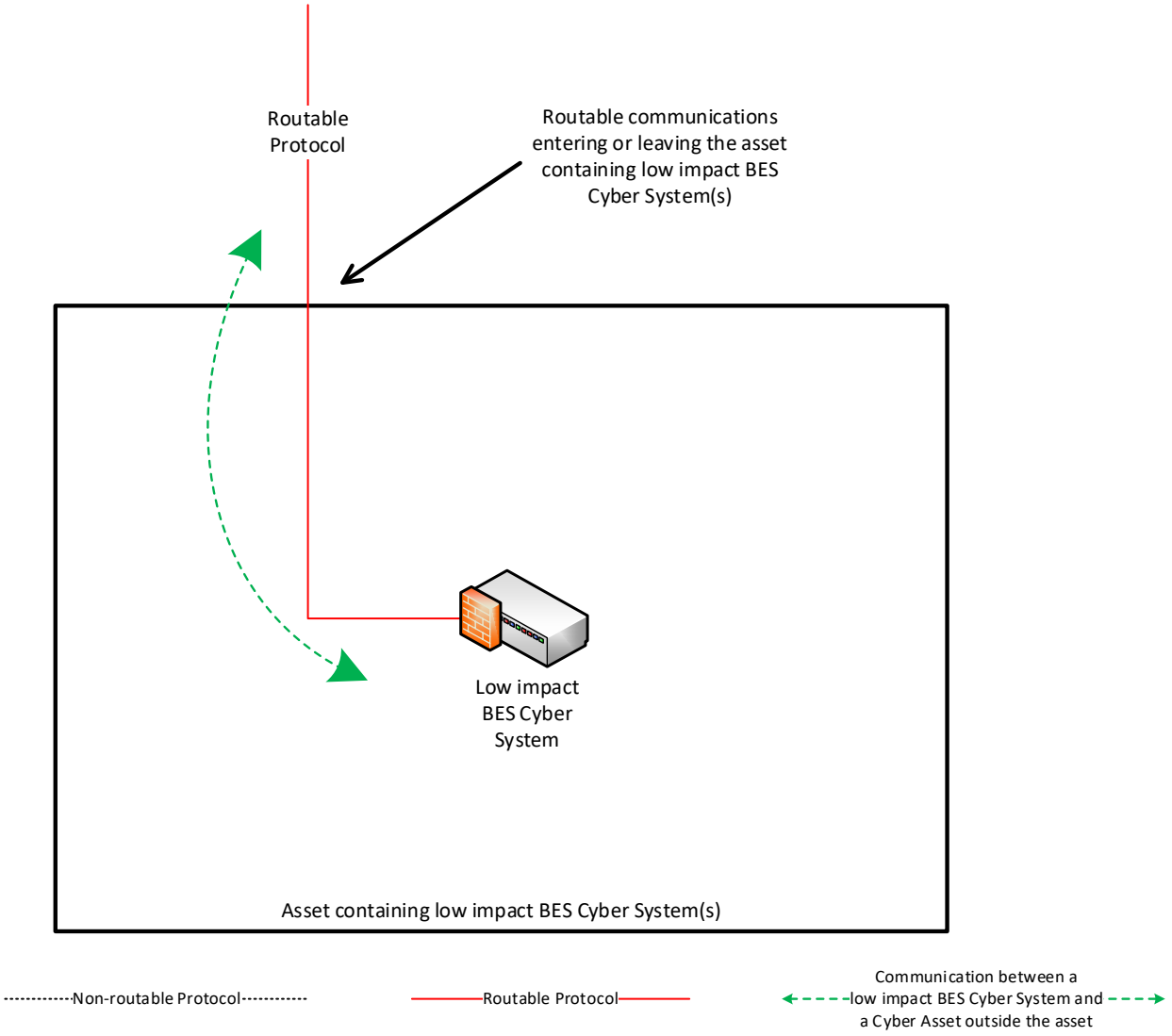

Reference Model 1

Reference Model 2 – Network-based Inbound & Outbound Access Permissions

The Responsible Entity may choose to use a security device that permits only necessary inbound and outbound electronic access to the low impact BES Cyber System(s) within the asset containing the low impact BES Cyber System(s). In this example, two low impact BES Cyber Systems are accessed using the routable protocol that is entering or leaving the asset containing the low impact BES Cyber System(s). The IP/Serial converter is continuing the same communications session from the Cyber Asset(s) that are outside the asset to the low impact BES Cyber System(s). The security device provides the electronic access controls to permit only necessary inbound and outbound routable protocol access to the low impact BES Cyber System(s). When permitting the inbound and outbound electronic access permissions using access control lists, the Responsible Entity could restrict communication(s) using source and destination addresses or ranges of addresses. Responsible Entities could also restrict communication(s) using ports or services based on the capability of the electronic access control, the low impact BES Cyber System(s), or the application(s).

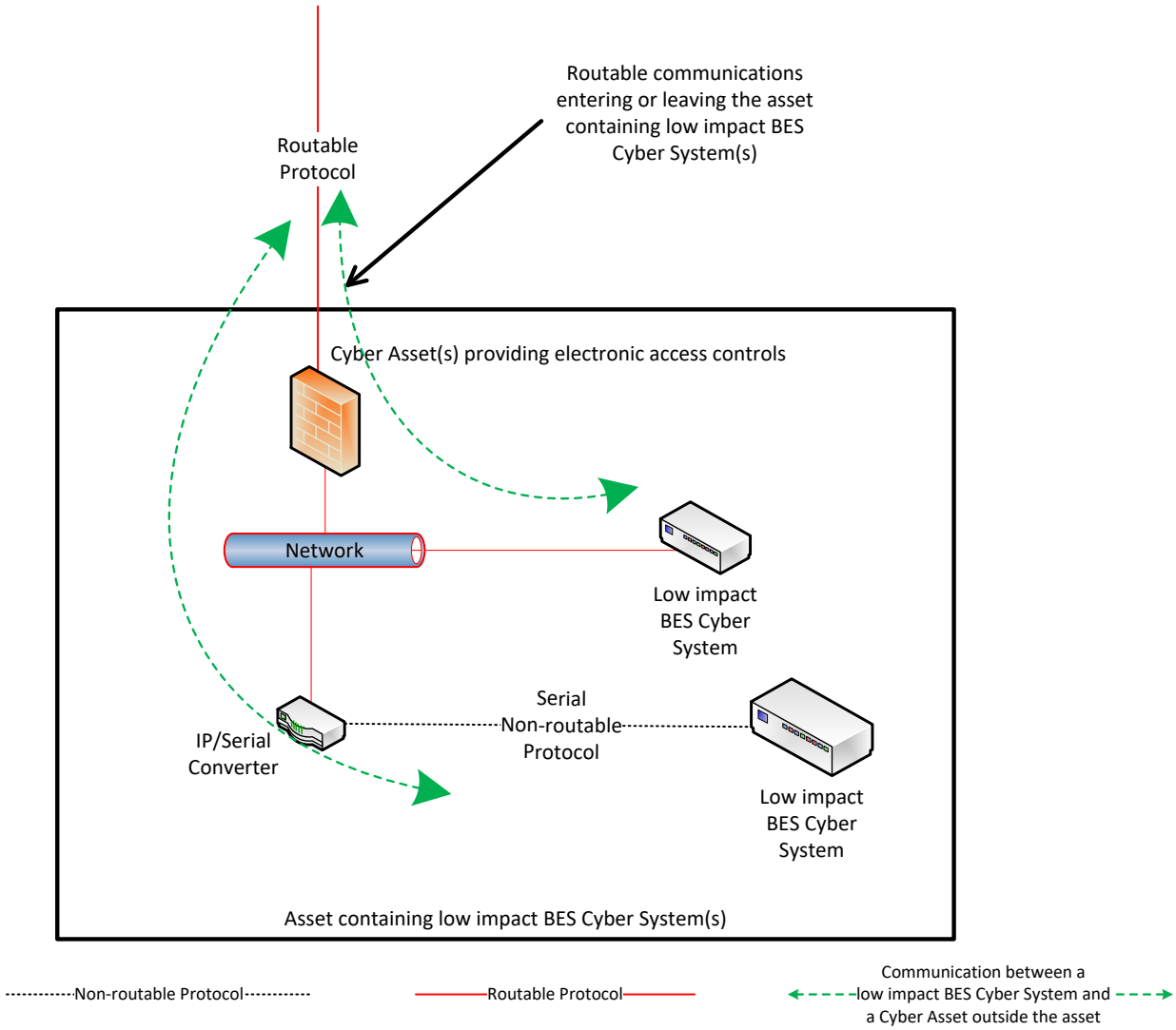

Reference Model 2

Reference Model 3 – Centralized Network-based Inbound & Outbound Access Permissions

The Responsible Entity may choose to utilize a security device at a centralized location that may or may not be at another asset containing low impact BES Cyber System(s). The electronic access control(s) do not necessarily have to reside inside the asset containing the low impact BES Cyber System(s). A security device is in place at "Location X" to act as the electronic access control and permit only necessary inbound and outbound routable protocol access between the low impact BES Cyber System(s) and the Cyber Asset(s) outside each asset containing low impact BES Cyber System(s). Care should be taken that electronic access to or between each asset is through the Cyber Asset(s) determined by the Responsible Entity to be performing electronic access controls at the centralized location. When permitting the inbound and outbound electronic access permissions using access control lists, the Responsible Entity could restrict communication(s) using source and destination addresses or ranges of addresses. Responsible Entities could also restrict communication(s) using ports or services based on the capability of the electronic access control, the low impact BES Cyber System(s), or the application(s).

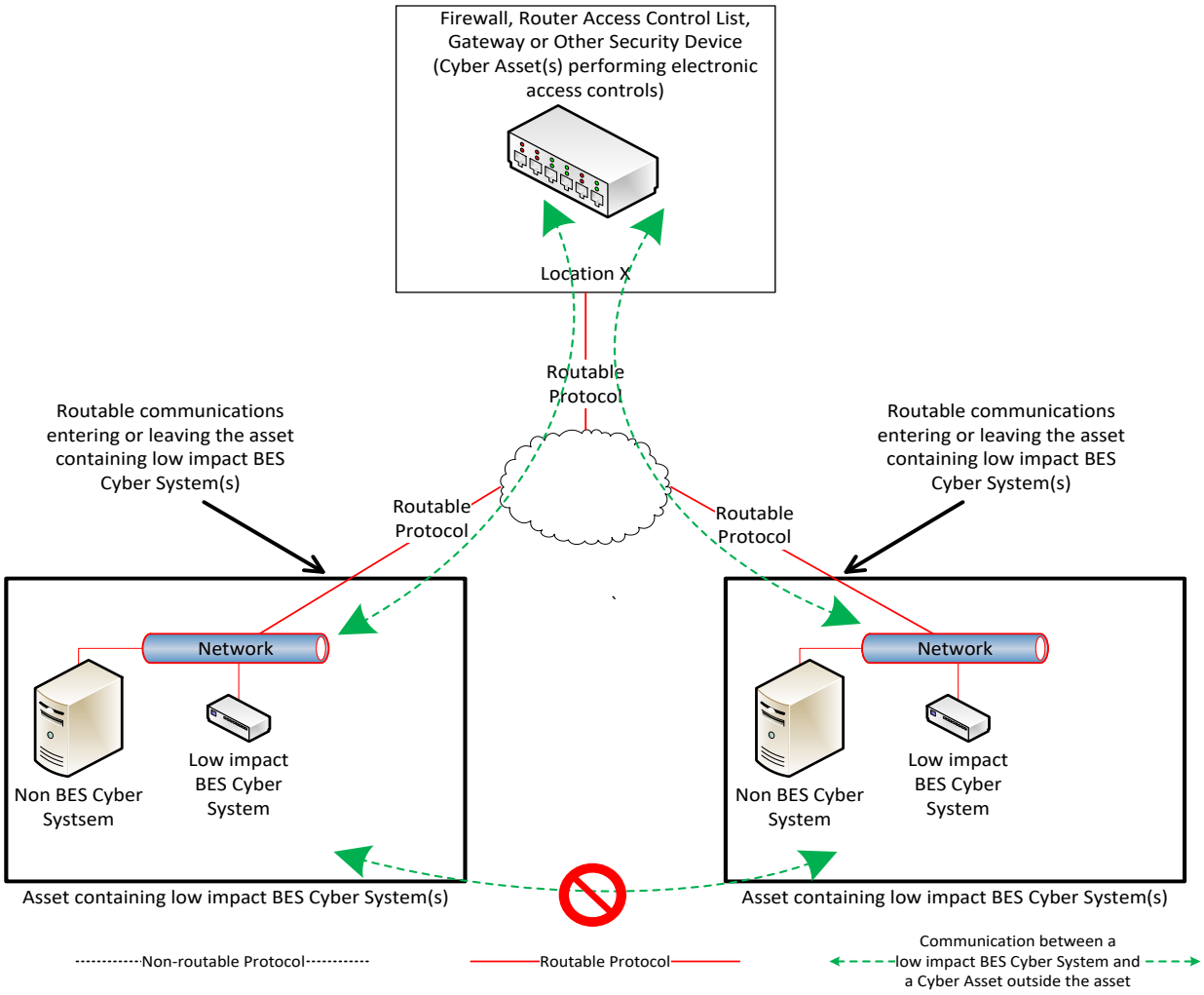

Reference Model 3

Reference Model 4 – Uni-directional Gateway

The Responsible Entity may choose to utilize a uni-directional gateway as the electronic access control. The low impact BES Cyber System(s) is not accessible (data cannot flow into the low impact BES Cyber System) using the routable protocol entering the asset due to the implementation of a "one-way" (uni-directional) path for data to flow. The uni-directional gateway is configured to permit only the necessary outbound communications using the routable protocol communication leaving the asset.

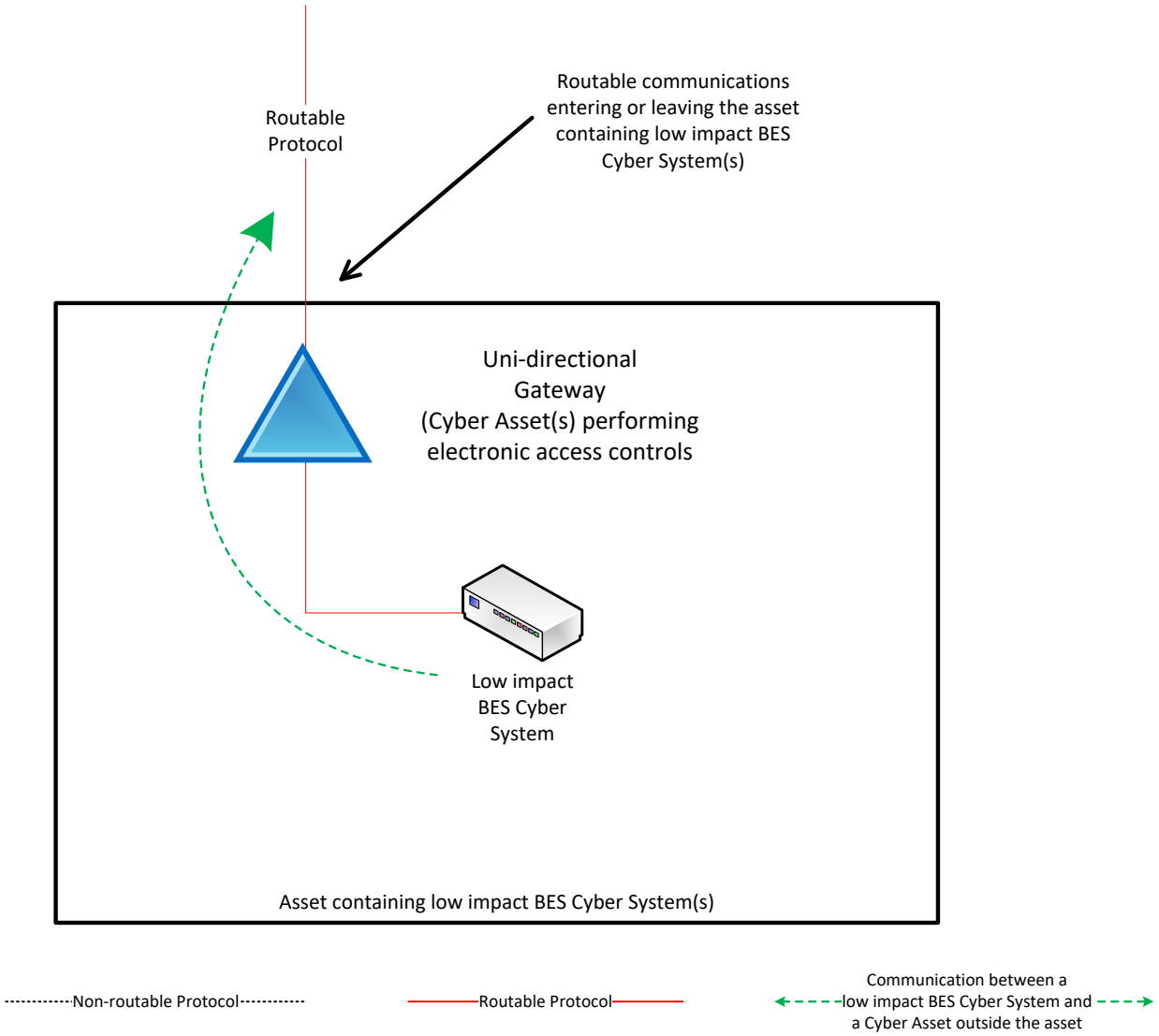

Reference Model 4

Reference Model 5 – User Authentication

This reference model demonstrates that Responsible Entities have flexibility in choosing electronic access controls so long as the security objective of the requirement is met. The Responsible Entity may choose to utilize a non-BES Cyber Asset located at the asset containing the low impact BES Cyber System that requires authentication for communication from the Cyber Asset(s) outside the asset. This non-BES Cyber System performing the authentication permits only authenticated communication to connect to the low impact BES Cyber System(s), meeting the first half of the security objective to permit only necessary inbound electronic access. Additionally, the non-BES Cyber System performing authentication is configured such that it permits only necessary outbound communication meeting the second half of the security objective. Often, the outbound communications would be controlled in this network architecture by permitting no communication to be initiated from the low impact BES Cyber System. This configuration may be beneficial when the only communication to a device is for user-initiated interactive access.

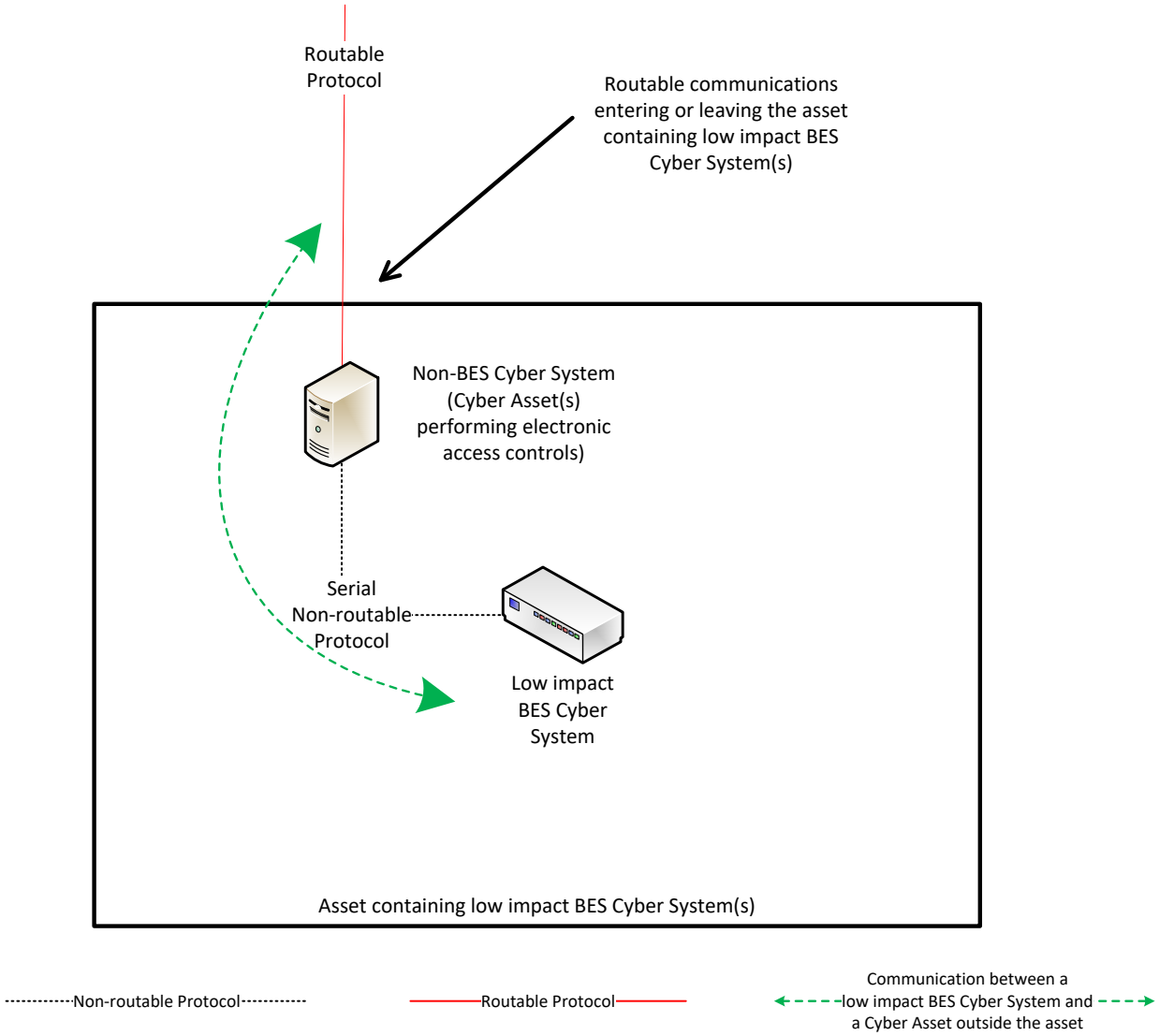

Reference Model 5

Reference Model 6 – Indirect Access

In implementing its electronic access controls, the Responsible Entity may identify that it has indirect access between the low impact BES Cyber System and a Cyber Asset outside the asset containing the low impact BES Cyber System through a non-BES Cyber Asset located within the asset. This indirect access meets the criteria of having communication between the low impact BES Cyber System and a Cyber Asset outside the asset containing the low impact BES Cyber System. In this reference model, it is intended that the Responsible Entity implement electronic access controls that permit only necessary inbound and outbound electronic access to the low impact BES Cyber System. Consistent with the other reference models provided, the electronic access in this reference model is controlled using the security device that is restricting the communication that is entering or leaving the asset.

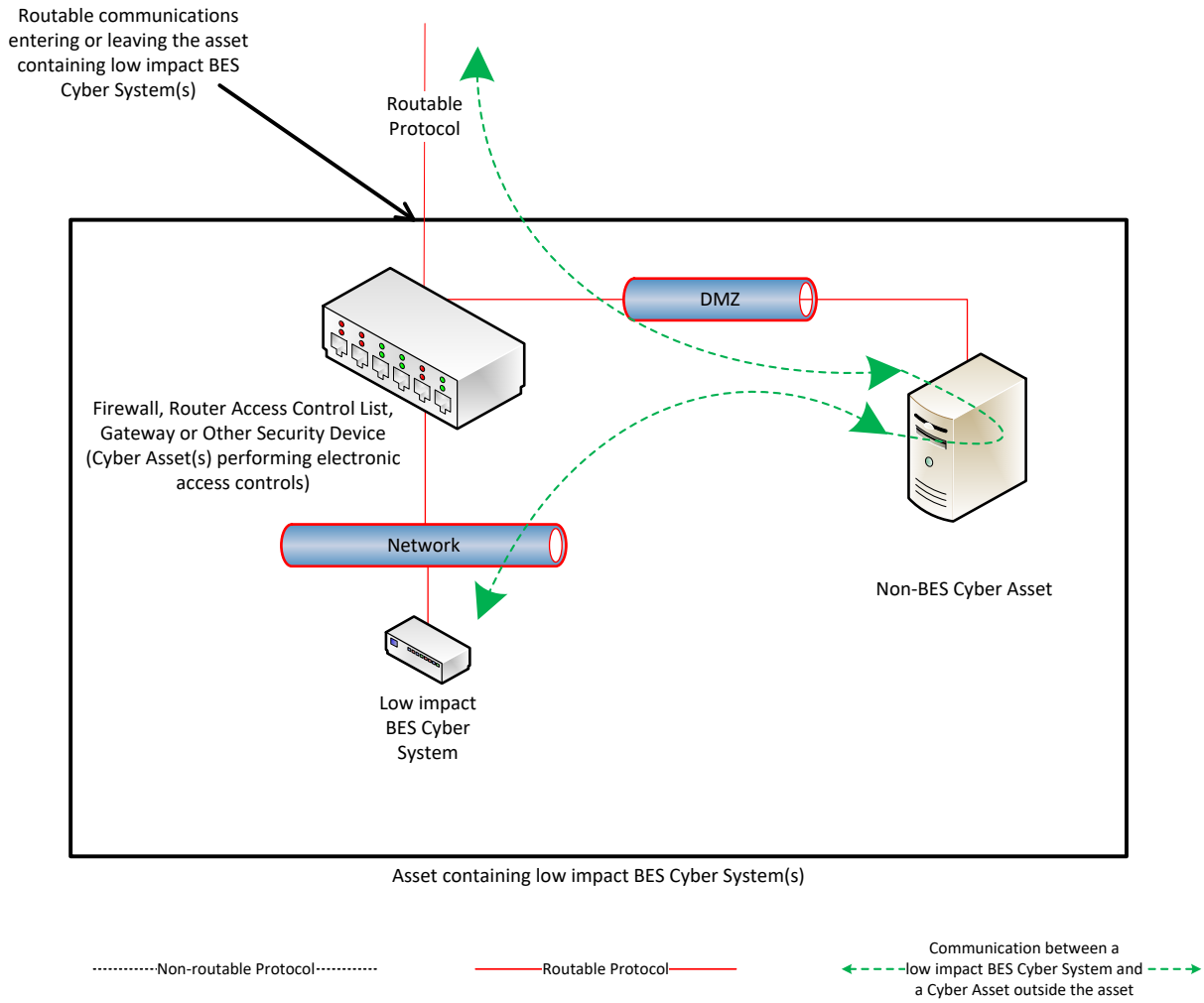

Reference Model 6

Reference Model 7 – Electronic Access Controls at assets containing low impact BES Cyber Systems and ERC

In this reference model, there is both a routable protocol entering and leaving the asset containing the low impact BES Cyber System(s) that is used by Cyber Asset(s) outside the asset and External Routable Connectivity because there is at least one medium impact BES Cyber System and one low impact BES Cyber System within the asset using the routable protocol communications. The Responsible Entity may choose to leverage an interface on the medium impact Electronic Access Control or Monitoring Systems (EACMS) to provide electronic access controls for purposes of CIP-003. The EACMS is therefore performing multiple functions – as a medium impact EACMS and as implementing electronic access controls for an asset containing low impact BES Cyber Systems.

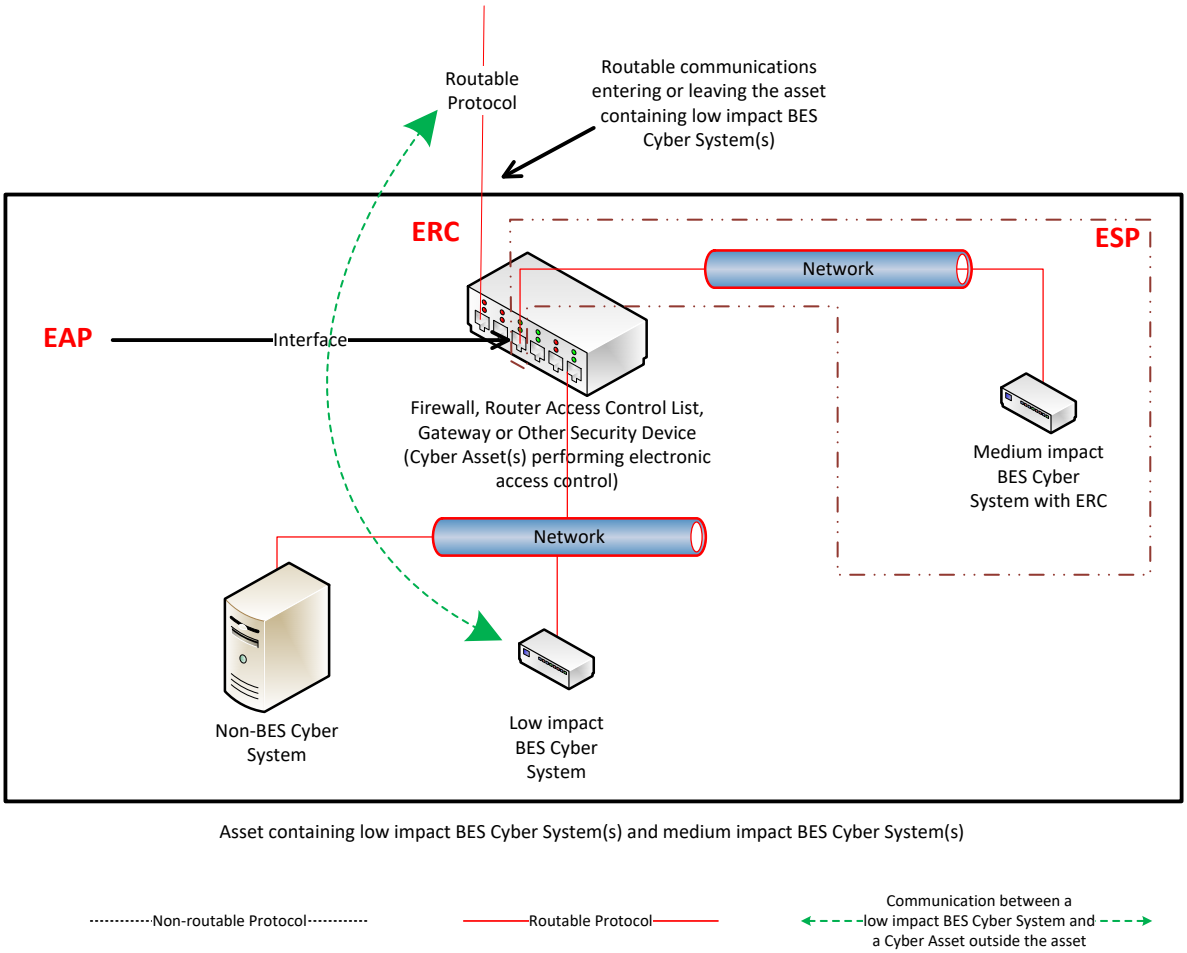

Reference Model 7

Reference Model 8 – Physical Isolation and Serial Non-routable Communications – No Electronic Access Controls Required

In this reference model, the criteria from Attachment 1, Section 3.1 requiring the implementation of electronic access controls are not met. This reference model demonstrates three concepts:

1) The physical isolation of the low impact BES Cyber System(s) from the routable protocol communication entering or leaving the asset containing the low impact BES Cyber System(s), commonly referred to as an 'air gap', mitigates the need to implement the required electronic access controls;
2) The communication to the low impact BES Cyber System from a Cyber Asset outside the asset containing the low impact BES Cyber System(s) using only a serial non-routable protocol where such communication is entering or leaving the asset mitigates the need to implement the required electronic access controls.
3) The routable protocol communication between the low impact BES Cyber System(s) and other Cyber Asset(s), such as the second low impact BES Cyber System depicted, may exist without needing to implement the required electronic access controls so long as the routable protocol communications never leaves the asset containing the low impact BES Cyber System(s).

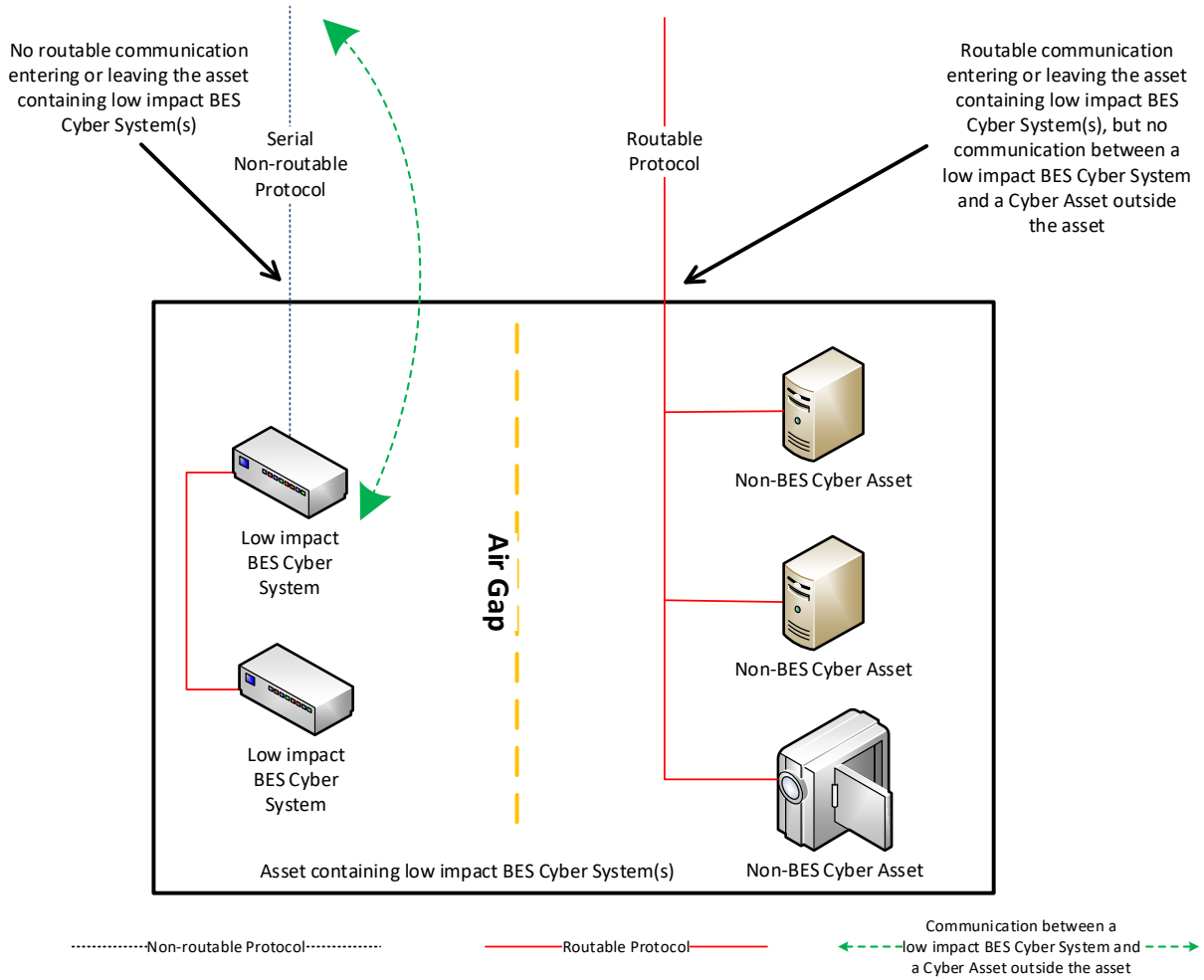

Reference Model 8

Reference Model 9 – Logical Isolation - No Electronic Access Controls Required

In this reference model, the criteria from Attachment 1, Section 3.1 requiring the implementation of electronic access controls are not met. The Responsible Entity has logically isolated the low impact BES Cyber System(s) from the routable protocol communication entering or leaving the asset containing low impact BES Cyber System(s). The logical network segmentation in this reference model permits no communication between a low impact BES Cyber System and a Cyber Asset outside the asset. Additionally, no indirect access exists because those non-BES Cyber Assets that are able to communicate outside the asset are strictly prohibited from communicating to the low impact BES Cyber System(s). The low impact BES Cyber System(s) is on an isolated network segment with logical controls preventing routable protocol communication into or out of the network containing the low impact BES Cyber System(s) and these communications never leave the asset using a routable protocol.

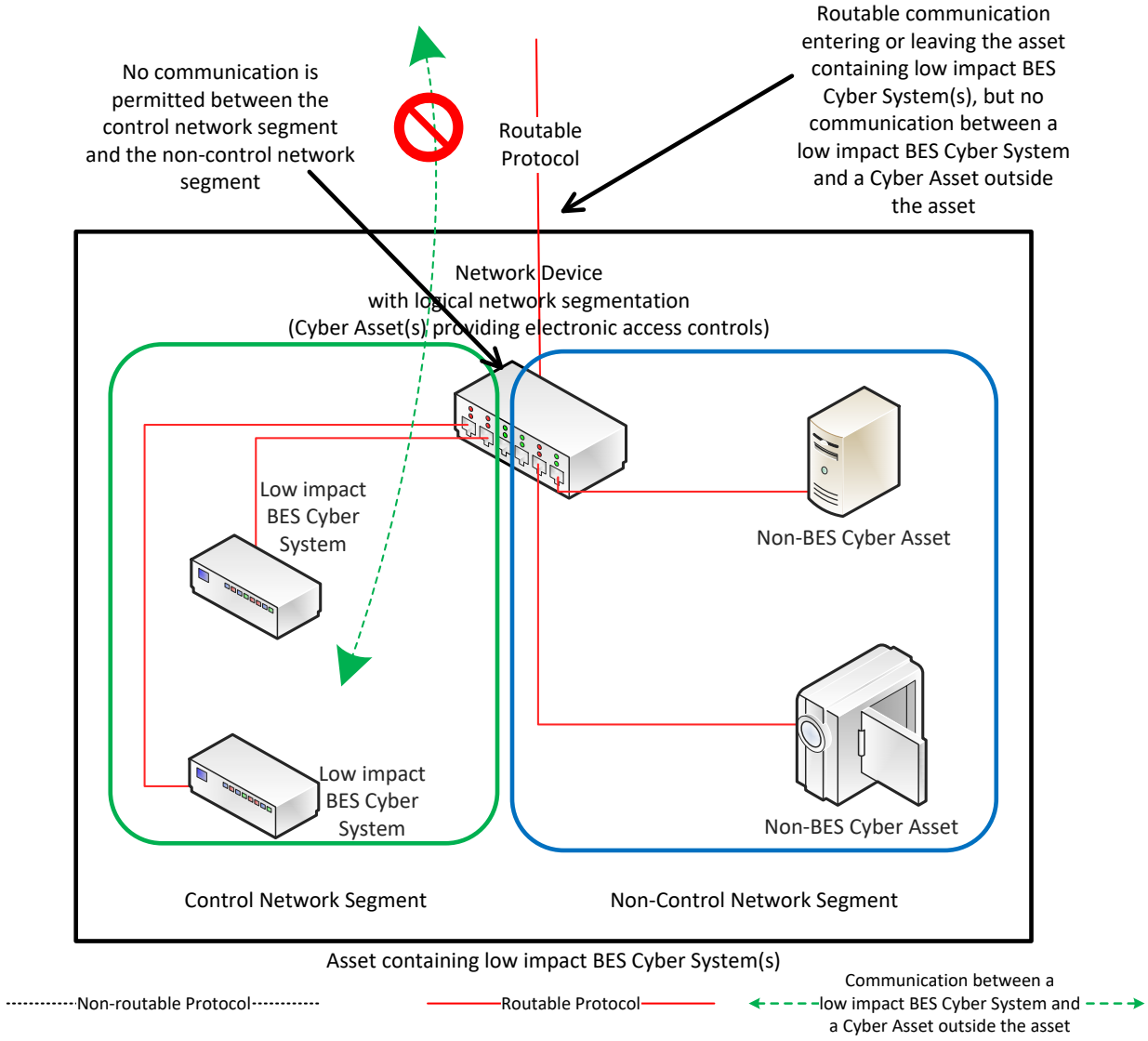

Reference Model 9

Reference Model 10 - Serial Non-routable Communications Traversing an Isolated Channel on a Non-routable Transport Network – No Electronic Access Controls Required

In this reference model, the criteria from Attachment 1, Section 3.1 requiring the implementation of electronic access controls are not met. This reference model depicts communication between a low impact BES Cyber System and a Cyber Asset outside the asset containing the low impact BES Cyber System over a serial non-routable protocol which is transported across a wide-area network using a protocol independent transport that may carry routable and non-routable communication such as a Time-Division Multiplexing (TDM) network, a Synchronous Optical Network (SONET), or a Multiprotocol Label Switching (MPLS) network. While there is routable protocol communication entering or leaving the asset containing low impact BES Cyber Systems(s) and there is communication between a low impact BES Cyber System and a Cyber Asset outside the asset, the communication between the low impact BES Cyber System and the Cyber Asset outside the asset is not using the routable protocol communication. This model is related to Reference Model 9 in that it relies on logical isolation to prohibit the communication between a low impact BES Cyber System and a Cyber Asset outside the asset from using a routable protocol.

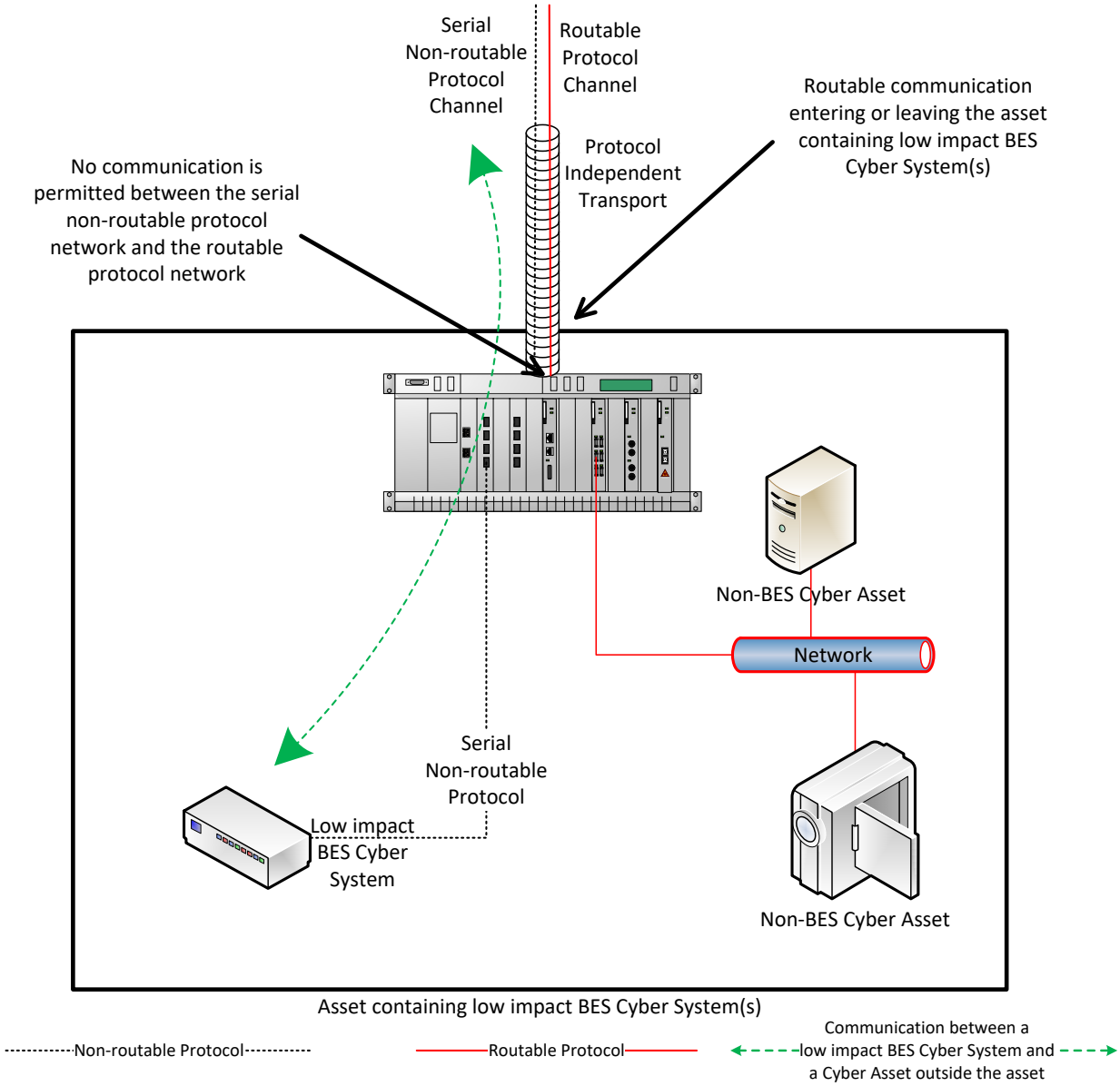

Reference Model 10

Dial-up Connectivity

Dial-up Connectivity to a low impact BES Cyber System is set to dial out only (no auto-answer) to a preprogrammed number to deliver data. Incoming Dial-up Connectivity is to a dialback modem, a modem that must be remotely controlled by the control center or control room, has some form of access control, or the low impact BES Cyber System has access control.

Insufficient Access Controls

Some examples of situations that would lack sufficient access controls to meet the intent of this requirement include:

- An asset has Dial-up Connectivity and a low impact BES Cyber System is reachable via an auto-answer modem that connects any caller to the Cyber Asset that has a default password. There is no practical access control in this instance.
- A low impact BES Cyber System has a wireless card on a public carrier that allows the BES Cyber System to be reachable via a public IP address. In essence, low impact BES Cyber Systems should not be accessible from the Internet and search engines such as Shodan.
- Dual-homing or multiple-network interface cards without disabling IP forwarding in the non-BES Cyber Asset within the DMZ to provide separation between the low impact BES Cyber System(s) and the external network would not meet the intent of "controlling" inbound and outbound electronic access assuming there was no other host-based firewall or other security devices on the non-BES Cyber Asset.

Requirement R2, Attachment 1, Section 4 – Cyber Security Incident Response

The entity should have one or more documented Cyber Security Incident response plan(s) that include each of the topics listed in Section 4. If, in the normal course of business, suspicious activities are noted at an asset containing low impact BES Cyber System(s), the intent is for the entity to implement a Cyber Security Incident response plan that will guide the entity in responding to the incident and reporting the incident if it rises to the level of a Reportable Cyber Security Incident.

Entities are provided the flexibility to develop their Attachment 1, Section 4 Cyber Security Incident response plan(s) by asset or group of assets. The plans do not need to be on a per asset site or per low impact BES Cyber System basis. Entities can choose to use a single enterprise-wide plan to fulfill the obligations for low impact BES Cyber Systems.

The plan(s) must be tested once every 36 months. This is not an exercise per low impact BES Cyber Asset or per type of BES Cyber Asset but rather is an exercise of each incident response plan the entity created to meet this requirement. An actual Reportable Cyber Security Incident counts as an exercise as do other forms of tabletop exercises or drills. NERC-led exercises such as GridEx participation would also count as an exercise provided the entity's response plan is followed. The intent of the requirement is for entities to keep the Cyber Security Incident response plan(s) current, which includes updating the plan(s), if needed, within 180 days following a test or an actual incident.

For low impact BES Cyber Systems, the only portion of the definition of Cyber Security Incident that would apply is, "A malicious act or suspicious event that disrupts, or was an attempt to

disrupt, the operation of a BES Cyber System." The other portion of that definition is not to be used to require ESPs and PSPs for low impact BES Cyber Systems.

Requirement R2, Attachment 1, Section 5 – Transient Cyber Assets and Removable Media Malicious Code Risk Mitigation

Most BES Cyber Assets and BES Cyber Systems are isolated from external public or untrusted networks, and therefore Transient Cyber Assets and Removable Media are needed to transport files to and from secure areas to maintain, monitor, or troubleshoot critical systems. Transient Cyber Assets and Removable Media are a potential means for cyber-attack. To protect the BES Cyber Assets and BES Cyber Systems, CIP-003 Requirement R2, Attachment 1, Section 5 requires Responsible Entities to document and implement a plan for how they will mitigate the risk of malicious code introduction to low impact BES Cyber Systems from Transient Cyber Assets and Removable Media. The approach of defining a plan allows the Responsible Entity to document processes that are supportable within its organization and in alignment with its change management processes.

Transient Cyber Assets can be one of many types of devices from a specially-designed device for maintaining equipment in support of the BES to a platform such as a laptop, desktop, or tablet that may interface with or run applications that support BES Cyber Systems and is capable of transmitting executable code to the BES Cyber Asset(s) or BES Cyber System(s). Note: Cyber Assets connected to a BES Cyber System for less than 30 days due to an unplanned removal, such as premature failure, are not intended to be identified as Transient Cyber Assets. Removable Media subject to this requirement include, among others, floppy disks, compact disks, USB flash drives, external hard drives, and other flash memory cards/drives that contain nonvolatile memory.

Examples of these temporarily connected devices include, but are not limited to:

- Diagnostic test equipment;
- Equipment used for BES Cyber System maintenance; or
- Equipment used for BES Cyber System configuration.

To meet the objective of mitigating risks associated with the introduction of malicious code at low impact BES Cyber Systems, Section 5 specifies the capabilities and possible security methods available to Responsible Entities based upon asset type and ownership.

With the list of options provided in Attachment 1, the entity has the discretion to use the option(s) that is most appropriate. This includes documenting its approach for how and when the entity reviews the Transient Cyber Asset under its control or under the control of parties other than the Responsible Entity. The entity should avoid implementing a security function that jeopardizes reliability by taking actions that would negatively impact the performance or support of the Transient Cyber Asset or BES Cyber Asset.

Malicious Code Risk Mitigation

The terms “mitigate”, “mitigating”, and “mitigation” are used in Section 5 in Attachment 1 to address the risks posed by malicious code when connecting Transient Cyber Assets and Removable Media to BES Cyber Systems. Mitigation is intended to mean that entities reduce security risks presented by connecting the Transient Cyber Asset or Removable Media. When determining the method(s) to mitigate the introduction of malicious code, it is not intended for entities to perform and document a formal risk assessment associated with the introduction of malicious code.

Per Transient Cyber Asset Capability

As with other CIP standards, the requirements are intended for an entity to use the method(s) that the system is capable of performing. The use of “per Transient Cyber Asset capability” is to eliminate the need for a Technical Feasibility Exception when it is understood that the device cannot use a method(s). For example, for malicious code, many types of appliances are not capable of implementing antivirus software; therefore, because it is not a capability of those types of devices, implementation of the antivirus software would not be required for those devices.

Requirement R2, Attachment 1, Section 5.1 - Transient Cyber Asset(s) Managed by the Responsible Entity

For Transient Cyber Assets and Removable Media that are connected to both low impact and medium/high impact BES Cyber Systems, entities must be aware of the differing levels of requirements and manage these assets under the program that matches the highest impact level to which they will connect.

Section 5.1: Entities are to document and implement their plan(s) to mitigate malicious code through the use of one or more of the protective measures listed, based on the capability of the Transient Cyber Asset.

The Responsible Entity has the flexibility to apply the selected method(s) to meet the objective of mitigating the introductions of malicious code either in an on-going or in an on-demand manner. An example of managing a device in an on-going manner is having the antivirus solution for the device managed as part of an end-point security solution with current signature or pattern updates, regularly scheduled systems scans, etc. In contrast, for devices that are used infrequently and the signatures or patterns are not kept current, the entity may manage those devices in an on-demand manner by requiring an update to the signatures or patterns and a scan of the device before the device is connected to ensure that it is free of malicious code.

Selecting management in an on-going or on-demand manner is not intended to imply that the control has to be verified at every single connection. For example, if the device is managed in an on-demand manner, but will be used to perform maintenance on several BES Cyber Asset(s), the Responsible Entity may choose to document that the Transient Cyber Asset has been updated before being connected as a Transient Cyber Asset for the first use of that maintenance work. The intent is not to require a log documenting each connection of a Transient Cyber Asset to a BES Cyber Asset.

The following is additional discussion of the methods to mitigate the introduction of malicious code.

- Antivirus software, including manual or managed updates of signatures or patterns, provides flexibility to manage Transient Cyber Asset(s) by deploying antivirus or endpoint security tools that maintain a scheduled update of the signatures or patterns. Also, for devices that do not regularly connect to receive scheduled updates, entities may choose to update the signatures or patterns and scan the Transient Cyber Asset prior to connection to ensure no malicious software is present.
- Application whitelisting is a method of authorizing only the applications and processes that are necessary on the Transient Cyber Asset. This reduces the risk that malicious software could execute on the Transient Cyber Asset and impact the BES Cyber Asset or BES Cyber System.
- When using methods other than those listed, entities need to document how the other method(s) meet the objective of mitigating the risk of the introduction of malicious code.

If malicious code is discovered on the Transient Cyber Asset, it must be mitigated prior to connection to a BES Cyber System to prevent the malicious code from being introduced into the BES Cyber System. An entity may choose to not connect the Transient Cyber Asset to a BES Cyber System to prevent the malicious code from being introduced into the BES Cyber System. Entities should also consider whether the detected malicious code is a Cyber Security Incident.

Requirement R2, Attachment 1, Section 5.2 - Transient Cyber Asset(s) Managed by a Party Other than the Responsible Entity

Section 5 also recognizes the lack of direct control over Transient Cyber Assets that are managed by parties other than the Responsible Entity. This lack of control, however, does not obviate the Responsible Entity's responsibility to ensure that methods have been deployed to mitigate the introduction of malicious code to low impact BES Cyber System(s) from Transient Cyber Assets it does not manage. Section 5 requires entities to review the other party's security practices with respect to Transient Cyber Assets to help meet the objective of the requirement. The use of "prior to connecting the Transient Cyber Assets" is intended to ensure that the Responsible Entity conducts the review before the first connection of the Transient Cyber Asset to help meet the objective to mitigate the introduction of malicious code. The SDT does not intend for the Responsible Entity to conduct a review for every single connection of that Transient Cyber Asset once the Responsible Entity has established the Transient Cyber Asset is meeting the security objective. The intent is to not require a log documenting each connection of a Transient Cyber Asset to a BES Cyber Asset.

To facilitate these controls, Responsible Entities may execute agreements with other parties to provide support services to BES Cyber Systems and BES Cyber Assets that may involve the use of Transient Cyber Assets. Entities may consider using the Department of Energy Cybersecurity

Procurement Language for Energy Delivery dated April 2014.[1] Procurement language may unify the other party and entity actions supporting the BES Cyber Systems and BES Cyber Assets. CIP program attributes may be considered including roles and responsibilities, access controls, monitoring, logging, vulnerability, and patch management along with incident response and back up recovery may be part of the other party's support. Entities may consider the "General Cybersecurity Procurement Language" and "The Supplier's Life Cycle Security Program" when drafting Master Service Agreements, Contracts, and the CIP program processes and controls.

Section 5.2: Entities are to document and implement their process(es) to mitigate the introduction of malicious code through the use of one or more of the protective measures listed.

- Review the use of antivirus software and signature or pattern levels to ensure that the level is adequate to the Responsible Entity to mitigate the risk of malicious software being introduced to an applicable system.
- Review the antivirus or endpoint security processes of the other party to ensure that their processes are adequate to the Responsible Entity to mitigate the risk of introducing malicious software to an applicable system.
- Review the use of application whitelisting used by the other party to mitigate the risk of introducing malicious software to an applicable system.
- Review the use of live operating systems or software executable only from read-only media to ensure that the media is free from malicious software itself. Entities should review the processes to build the read-only media as well as the media itself.
- Review system hardening practices used by the other party to ensure that unnecessary ports, services, applications, etc. have been disabled or removed. This method intends to reduce the attack surface on the Transient Cyber Asset and reduce the avenues by which malicious software could be introduced.

Requirement R2, Attachment 1, Section 5.3 - Removable Media

Entities have a high level of control for Removable Media that are going to be connected to their BES Cyber Assets.

Section 5.3: Entities are to document and implement their process(es) to mitigate the introduction of malicious code through the use of one or more method(s) to detect malicious code on the Removable Media before it is connected to a BES Cyber Asset. When using the method(s) to detect malicious code, it is expected to occur from a system that is not part of the BES Cyber System to reduce the risk of propagating malicious code into the BES Cyber System network or onto one of the BES Cyber Assets. If malicious code is discovered, it must be

[1] http://www.energy.gov/oe/downloads/cybersecurity-procurement-language-energy-delivery-april-2014

removed or mitigated to prevent it from being introduced into the BES Cyber Asset or BES Cyber System. Entities should also consider whether the detected malicious code is a Cyber Security Incident. Frequency and timing of the methods used to detect malicious code were intentionally excluded from the requirement because there are multiple timing scenarios that can be incorporated into a plan to mitigate the risk of malicious code. The SDT does not intend to obligate a Responsible Entity to conduct a review for every single connection of Removable Media, but rather to implement its plan(s) in a manner that protects all BES Cyber Systems where Removable Media may be used. The intent is to not require a log documenting each connection of Removable Media to a BES Cyber Asset.

As a method to detect malicious code, entities may choose to use Removable Media with on-board malicious code detection tools. For these tools, the Removable Media are still used in conjunction with a Cyber Asset to perform the detection. For Section 5.3.1, the Cyber Asset used to perform the malicious code detection must be outside of the BES Cyber System.

Requirement R3:

The intent of CIP-003-7, Requirement R3 is effectively unchanged since prior versions of the standard. The specific description of the CIP Senior Manager has now been included as a defined term rather than clarified in the Reliability Standard itself to prevent any unnecessary cross-reference to this standard. It is expected that the CIP Senior Manager will play a key role in ensuring proper strategic planning, executive/board-level awareness, and overall program governance.

Requirement R4:

As indicated in the rationale for CIP-003-7, Requirement R4, this requirement is intended to demonstrate a clear line of authority and ownership for security matters. The intent of the SDT was not to impose any particular organizational structure, but, rather, the intent is to afford the Responsible Entity significant flexibility to adapt this requirement to its existing organizational structure. A Responsible Entity may satisfy this requirement through a single delegation document or through multiple delegation documents. The Responsible Entity can make use of the delegation of the delegation authority itself to increase the flexibility in how this applies to its organization. In such a case, delegations may exist in numerous documentation records as long as the collection of these documentation records shows a clear line of authority back to the CIP Senior Manager. In addition, the CIP Senior Manager could also choose not to delegate any authority and meet this requirement without such delegation documentation.

The Responsible Entity must keep its documentation of the CIP Senior Manager and any delegations up-to-date. This is to ensure that individuals do not assume any undocumented authority. However, delegations do not have to be re-instated if the individual who delegated the task changes roles or the individual is replaced. For instance, assume that John Doe is named the CIP Senior Manager and he delegates a specific task to the Substation Maintenance Manager. If John Doe is replaced as the CIP Senior Manager, the CIP Senior Manager documentation must be updated within the specified timeframe, but the existing delegation to the Substation Maintenance Manager remains in effect as approved by the previous CIP Senior Manager, John Doe.

Rationale:
During development of this standard, text boxes were embedded within the standard to explain the rationale for various parts of the standard. Upon BOT approval, the text from the rationale text boxes was moved to this section.

Rationale for Requirement R1:
One or more security policies enable effective implementation of the requirements of the cyber security Reliability Standards. The purpose of policies is to provide a management and governance foundation for all requirements that apply to a Responsible Entity's BES Cyber Systems. The Responsible Entity can demonstrate through its policies that its management supports the accountability and responsibility necessary for effective implementation of the requirements.

Annual review and approval of the cyber security policies ensures that the policies are kept-up-to-date and periodically reaffirms management's commitment to the protection of its BES Cyber Systems.

Rationale for Requirement R2:
In response to FERC Order No. 791, Requirement R2 requires entities to develop and implement cyber security plans to meet specific security control objectives for assets containing low impact BES Cyber System(s). The cyber security plan(s) covers five subject matter areas: (1) cyber security awareness; (2) physical security controls; (3) electronic access controls; (4) Cyber Security Incident response; and (5) Transient Cyber Asset and Removable Media Malicious Code Risk Mitigation. This plan(s), along with the cyber security policies required under Requirement R1, Part 1.2, provides a framework for operational, procedural, and technical safeguards for low impact BES Cyber Systems.

Considering the varied types of low impact BES Cyber Systems across the BES, Attachment 1 provides Responsible Entities flexibility on how to apply the security controls to meet the security objectives. Additionally, because many Responsible Entities have multiple-impact rated BES Cyber Systems, nothing in the requirement prohibits entities from using their high and medium impact BES Cyber System policies, procedures, and processes to implement security controls required for low impact BES Cyber Systems, as detailed in Requirement R2, Attachment 1.

Responsible Entities will use their identified assets containing low impact BES Cyber System(s) (developed pursuant to CIP-002) to substantiate the sites or locations associated with low impact BES Cyber System(s). However, there is no requirement or compliance expectation for Responsible Entities to maintain a list(s) of individual low impact BES Cyber System(s) and their associated cyber assets or to maintain a list of authorized users.

Rationale for Modifications to Sections 2 and 3 of Attachment 1 (Requirement R2):
Requirement R2 mandates that entities develop and implement one or more cyber security plan(s) to meet specific security objectives for assets containing low impact BES Cyber System(s). In Paragraph 73 of FERC Order No. 822, the Commission directed NERC to modify "…the Low Impact External Routable Connectivity definition to reflect the commentary in the Guidelines and Technical Basis section of CIP-003-6…to provide needed clarity to the definition

and eliminate ambiguity surrounding the term 'direct' as it is used in the proposed definition…within one year of the effective date of this Final Rule."

The revisions to Section 3 incorporate select language from the LERC definition into Attachment 1 and focus the requirement on implementing electronic access controls for asset(s) containing low impact BES Cyber System(s). This change requires the Responsible Entity to permit only necessary inbound and outbound electronic access when using a routable protocol entering or leaving the asset between low impact BES Cyber System(s) and a Cyber Asset(s) outside the asset containing low impact BES Cyber system(s). When this communication is present, Responsible Entities are required to implement electronic access controls unless that communication meets the following exclusion language (previously in the definition of LERC) contained in romanette (iii): "not used for time-sensitive protection or control functions between intelligent electronic devices (e.g. communications using protocol IEC TR-61850-90-5 R-GOOSE)".

The revisions to Section 2 of Attachment 1 complement the revisions to Section 3; consequently, the requirement now mandates the Responsible Entity control physical access to "the Cyber Asset(s), as specified by the Responsible Entity, that provide electronic access control(s) implemented for Section 3.1, if any." The focus on electronic access controls rather than on the Low Impact BES Cyber System Electronic Access Points (LEAPs) eliminates the need for LEAPs.

Given these revisions to Sections 2 and 3, the NERC Glossary terms: Low Impact External Routable Connectivity (LERC) and Low Impact BES Cyber System Electronic Access Point (LEAP) will be retired.

Rationale for Section 5 of Attachment 1 (Requirement R2):
Requirement R2 mandates that entities develop and implement one or more cyber security plan(s) to meet specific security objectives for assets containing low impact BES Cyber System(s). In Paragraph 32 of FERC Order No. 822, the Commission directed NERC to "…provide mandatory protection for transient devices used at Low Impact BES Cyber Systems based on the risk posed to bulk electric system reliability." Transient devices are potential vehicles for introducing malicious code into low impact BES Cyber Systems. Section 5 of Attachment 1 is intended to mitigate the risk of malware propagation to the BES through low impact BES Cyber Systems by requiring entities to develop and implement one or more plan(s) to address the risk. The cyber security plan(s) along with the cyber security policies required under Requirement R1, Part 1.2, provide a framework for operational, procedural, and technical safeguards for low impact BES Cyber Systems.

Rationale for Requirement R3:

The identification and documentation of the single CIP Senior Manager ensures that there is clear authority and ownership for the CIP program within an organization, as called for in Blackout Report Recommendation 43. The language that identifies CIP Senior Manager responsibilities is included in the Glossary of Terms used in NERC Reliability Standards so that it may be used across the body of CIP standards without an explicit cross-reference.

FERC Order No. 706, Paragraph 296, requests consideration of whether the single senior manager should be a corporate officer or equivalent. As implicated through the defined term, the senior manager has "the overall authority and responsibility for leading and managing implementation of the requirements within this set of standards" which ensures that the senior manager is of sufficient position in the Responsible Entity to ensure that cyber security receives the prominence that is necessary. In addition, given the range of business models for responsible entities, from municipal, cooperative, federal agencies, investor owned utilities, privately owned utilities, and everything in between, the SDT believes that requiring the CIP Senior Manager to be a "corporate officer or equivalent" would be extremely difficult to interpret and enforce on a consistent basis.

Rationale for Requirement R4:

The intent of the requirement is to ensure clear accountability within an organization for certain security matters. It also ensures that delegations are kept up-to-date and that individuals do not assume undocumented authority.

In FERC Order No. 706, Paragraphs 379 and 381, the Commission notes that Recommendation 43 of the 2003 Blackout Report calls for "clear lines of authority and ownership for security matters." With this in mind, the Standard Drafting Team has sought to provide clarity in the requirement for delegations so that this line of authority is clear and apparent from the documented delegations.

A. Introduction

1. **Title:** Event Reporting

2. **Number:** EOP-004-4

3. **Purpose:** To improve the reliability of the Bulk Electric System by requiring the reporting of events by Responsible Entities.

4. **Applicability:**

   4.1. Functional Entities: For the purpose of the Requirements and the EOP-004 Attachment 1 contained herein, the following Functional Entities will be collectively referred to as "Responsible Entity."

   4.1.1. Reliability Coordinator

   4.1.2. Balancing Authority

   4.1.3. Transmission Owner

   4.1.4. Transmission Operator

   4.1.5. Generator Owner

   4.1.6. Generator Operator

   4.1.7. Distribution Provider

5. **Effective Date*:** See the Implementation Plan for EOP-004-4.

B. Requirements and Measures

R1. Each Responsible Entity shall have an event reporting Operating Plan in accordance with EOP-004-4 Attachment 1 that includes the protocol(s) for reporting to the Electric Reliability Organization and other organizations (e.g., the Regional Entity, company personnel, the Responsible Entity's Reliability Coordinator, law enforcement, or governmental authority). *[Violation Risk Factor: Lower] [Time Horizon: Operations Planning]*

M1. Each Responsible Entity will have a dated event reporting Operating Plan that includes protocol(s) and each organization identified to receive an event report for event types specified in EOP-004-4 Attachment 1 and in accordance with the entity responsible for reporting.

R2. Each Responsible Entity shall report events specified in EOP-004-4 Attachment 1 to the entities specified per their event reporting Operating Plan by the later of 24 hours of recognition of meeting an event type threshold for reporting or by the end of the Responsible Entity's next business day (4 p.m. local time will be considered the end of the business day). *[Violation Risk Factor: Medium] [Time Horizon: Operations Assessment]*

M2. Each Responsible Entity will have as evidence of reporting an event to the entities specified per their event reporting Operating Plan either a copy of the completed EOP-004-4 Attachment 2 form or a DOE-OE-417 form; and some evidence of submittal (e.g., operator log or other operating documentation, voice recording, electronic mail message, or confirmation of facsimile) demonstrating that the event report was submitted by the later of 24 hours of recognition of meeting an event type threshold for reporting or by the end of the Responsible Entity's next business day (4 p.m. local time will be considered the end of the business day).

C. Compliance

1. Compliance Monitoring Process

1.1. Compliance Enforcement Authority:
The British Columbia Utilities Commission.

1.2. Evidence Retention:
The Responsible Entity shall keep data or evidence to show compliance as identified below unless directed by its Compliance Enforcement Authority to retain specific evidence for a longer period of time as part of an investigation:

The following evidence retention periods identify the period of time an entity is required to retain specific evidence to demonstrate compliance. For instances where the evidence retention period specified below is shorter than the time since the last audit, the Compliance Enforcement Authority may ask an entity to provide other evidence to show that it was compliant for the full time period since the last audit.

- Each Responsible Entity shall retain the current Operating Plan plus each version issued since the last audit for Requirement R1, and Measure M1.
- Each Responsible Entity shall retain evidence of compliance since the last audit for Requirement R2 and Measure M2.

If a Responsible Entity is found non-compliant, it shall keep information related to the non-compliance until mitigation is complete and approved or for the duration specified above, whichever is longer.

The Compliance Enforcement Authority shall keep the last audit records and all requested and submitted subsequent audit records.

1.3. Compliance Monitoring and Enforcement Program
As defined in the NERC Rules of Procedure, "Compliance Monitoring and Enforcement Program" refers to the identification of the processes that will be used to evaluate data or information for the purpose of assessing performance or outcomes with the associated Reliability Standard.

Violation Severity Levels

R #	Violation Severity Levels			
	Lower VSL	Moderate VSL	High VSL	Severe VSL
R1.	The Responsible Entity had an event reporting Operating Plan, but failed to include one applicable event type.	The Responsible Entity had an event reporting Operating Plan, but failed to include two applicable event types.	The Responsible Entity had an event reporting Operating Plan, but failed to include three applicable event types.	The Responsible Entity had an event reporting Operating Plan, but failed to include four or more applicable event types. OR The Responsible Entity failed to have an event reporting Operating Plan.
R2.	The Responsible Entity submitted an event report (e.g., written or verbal) to all required recipients up to 24 hours after the timing requirement for submittal. OR The Responsible Entity failed to submit an event report (e.g., written or verbal) to one entity identified in its event reporting Operating Plan within 24 hours or by the end of the next business day, as applicable.	The Responsible Entity submitted an event report (e.g., written or verbal) to all required recipients more than 24 hours but less than or equal to 48 hours after the timing requirement for submittal. OR The Responsible Entity failed to submit an event report (e.g., written or verbal) to two entities identified in its event reporting Operating Plan within 24 hours or by	The Responsible Entity submitted an event report (e.g., written or verbal) to all required recipients more than 48 hours but less than or equal to 72 hours after the timing requirement for submittal. OR The Responsible Entity failed to submit an event report (e.g., written or verbal) to three entities identified in its event reporting Operating Plan within 24 hours or by	The Responsible Entity submitted an event report (e.g., written or verbal) to all required recipients more than 72 hours after the timing requirement for submittal. OR The Responsible Entity failed to submit an event report (e.g., written or verbal) to four or more entities identified in its event reporting Operating Plan within 24 hours or by the

R #	Violation Severity Levels			
		the end of the next business day, as applicable.	the end of the next business day, as applicable.	end of the next business day, as applicable. OR The Responsible Entity failed to submit a report for an event in EOP-004-4 Attachment 1.

D. Regional Variances

None.

E. Associated Documents

Link to the Implementation Plan and other important associated documents.

EOP-004 - Attachment 1: Reportable Events

NOTE: Under certain adverse conditions (e.g. severe weather, multiple events) it may not be possible to report the damage caused by an event and issue a written event report within the timing in the standard. In such cases, the affected Responsible Entity shall notify parties per Requirement R2 and provide as much information as is available at the time of the notification. Submit reports to the ERO via one of the following: e-mail: systemawareness@nerc.net, Facsimile 404-446-9770 or Voice: 404-446-9780, select Option 1.

Submit EOP-004 Attachment 2 (or DOE-OE-417) pursuant to Requirements R1 and R2.

Rationale for Attachment 1:

System-wide voltage reduction to maintain the continuity of the BES: The TOP is operating the system and is the only entity that would implement system-wide voltage reduction.

Complete loss of Interpersonal Communication and Alternative Interpersonal Communication capability at a BES control center: To align EOP-004-4 with COM-001-2.1. COM-001-2.1 defined Interpersonal Communication for the NERC Glossary of Terms as: "Any medium that allows two or more individuals to interact, consult, or exchange information." The NERC Glossary of Terms defines Alternative Interpersonal Communication as: "Any Interpersonal Communication that is able to serve as a substitute for, and does not utilize the same infrastructure (medium) as, Interpersonal Communication used for day-to-day operation."

Complete loss of monitoring or control capability at a BES control center: Language revisions to: "Complete loss of monitoring or control capability at a BES control center for 30 continuous minutes or more" provides clarity to the "Threshold for Reporting" and better aligns with the ERO Event Analysis Process.

Event Type	Entity with Reporting Responsibility	Threshold for Reporting
Damage or destruction of a Facility	RC, BA, TOP	Damage or destruction of a Facility within its Reliability Coordinator Area, Balancing Authority Area or Transmission Operator Area that results in action(s) to avoid a BES Emergency.

Event Type	Entity with Reporting Responsibility	Threshold for Reporting
Damage or destruction of its Facility	TO, TOP, GO, GOP, DP	Damage or destruction of its Facility that results from actual or suspected intentional human action. It is not necessary to report theft unless it degrades normal operation of its Facility.
Physical threats to its Facility	TO, TOP, GO, GOP, DP	Physical threat to its Facility excluding weather or natural disaster related threats, which has the potential to degrade the normal operation of the Facility. OR Suspicious device or activity at its Facility.
Physical threats to its BES control center	RC, BA, TOP	Physical threat to its BES control center, excluding weather or natural disaster related threats, which has the potential to degrade the normal operation of the control center. OR Suspicious device or activity at its BES control center.
Public appeal for load reduction resulting from a BES Emergency	BA	Public appeal for load reduction to maintain continuity of the BES.
System-wide voltage reduction resulting from a BES Emergency	TOP	System-wide voltage reduction of 3% or more.
Firm load sheddingresulting from a BES Emergency	Initiating RC, BA, or TOP	Firm load shedding ≥ 100 MW (manual or automatic).

Event Type	Entity with Reporting Responsibility	Threshold for Reporting
BES Emergency resulting in voltage deviation on a Facility	TOP	A voltage deviation of =/> 10% of nominal voltage sustained for ≥ 15 continuous minutes.
Uncontrolled loss of firm load resulting from a BES Emergency	BA, TOP, DP	Uncontrolled loss of firm load for ≥ 15 minutes from a single incident: ≥ 300 MW for entities with previous year's peak demand ≥ 3,000 MW OR ≥ 200 MW for all other entities
System separation (islanding)	RC, BA, TOP	Each separation resulting in an island ≥ 100 MW
Generation loss	BA	Total generation loss, within one minute, of: ≥ 2,000 MW in the Eastern, Western, or Quebec Interconnection OR ≥ 1,400 MW in the ERCOT Interconnection Generation loss will be used to report Forced Outages not weather patterns or fuel supply unavailability for dispersed power producing resources.

Event Type	Entity with Reporting Responsibility	Threshold for Reporting
Complete loss of off-site power to a nuclear generating plant (grid supply)	TO, TOP	Complete loss of off-site power (LOOP) affecting a nuclear generating station per the Nuclear Plant Interface Requirements
Transmission loss	TOP	Unexpected loss within its area, contrary to design, of three or more BES Facilities caused by a common disturbance (excluding successful automatic reclosing).
Unplanned evacuation of its BES control center	RC, BA, TOP	Unplanned evacuation from its BES control center facility for 30 continuous minutes or more.
Complete loss of Interpersonal Communication and Alternative Interpersonal Communication capability at its staffed BES control center	RC, BA, TOP	Complete loss of Interpersonal Communication and Alternative Interpersonal Communication capability affecting its staffed BES control center for 30 continuous minutes or more.
Complete loss of monitoring or control capability at its staffed BES control center	RC, BA, TOP	Complete loss of monitoring or control capability at its staffed BES control center for 30 continuous minutes or more.

EOP-004 - Attachment 2: Event Reporting Form

EOP-004 Attachment 2: Event Reporting Form Use this form to report events. The Electric Reliability Organization will accept the DOE OE-417 form in lieu of this form if the entity is required to submit an OE-417 report. Submit reports to the ERO via one of the following: e-mail: systemawareness@nerc.net, Facsimile 404-446-9770 or voice: 404-446-9780, Option 1. Also submit to other applicable organizations per Requirement R1 "… (e.g., the Regional Entity, company personnel, the Responsible Entity's Reliability Coordinator, law enforcement, or Applicable Governmental Authority)."		
	Task	**Comments**
1.	Entity filing the report include: Company name: Name of contact person: Email address of contact person: Telephone Number: Submitted by (name):	
2.	Date and Time of recognized event. Date: (mm/dd/yyyy) Time: (hh:mm) Time/Zone:	
3.	Did the event originate in your system?	Yes ☐ No☐ Unknown ☐
4.	**Event Identification and Description:**	
	(Check applicable box) ☐ Damage or destruction of a Facility ☐ Physical threat to its Facility ☐ Physical threat to its BES control center ☐ BES Emergency: ☐ firm load shedding ☐ public appeal for load reduction ☐ System-wide voltage reduction ☐ voltage deviation on a Facility ☐ uncontrolled loss of firm load ☐ System separation (islanding) ☐ Generation loss ☐ Complete loss of off-site power to a nuclear generating plant (grid supply) ☐ Transmission loss ☐ Unplanned evacuation of its BES control center ☐ Complete loss of Interpersonal Communication and Alternative Interpersonal Communication capability at its staffed BES control center ☐ Complete loss of monitoring or control capability at its staffed BES control center	Written description (optional):

Version History

Version	Date	Action	Change Tracking
2		Merged CIP-001-2a Sabotage Reporting and EOP-004-1 Disturbance Reporting into EOP-004-2 Event Reporting; Retire CIP-001-2a Sabotage Reporting and Retired EOP-004-1 Disturbance Reporting.	Revision to entire standard (Project 2009-01)
2	November 7, 2012	Adopted by the NERC Board of Trustees	
2	June 20, 2013	FERC approved	
3	November 13, 2014	Adopted by the NERC Board of Trustees	Replaced references to Special protection System and SPS with Remedial Action Scheme and RAS
3	November 19, 2015	FERC Order issued approving EOP-004-3. Docket No. RM15-13-000.	
4	February 9, 2017	Adopted by the NERC Board of Trustees	Revised
4	January 18, 2018	FERC order issued approving EOP-004-4. Docket No. RM17-12-000	

Guideline and Technical Basis

Multiple Reports for a Single Organization

For entities that have multiple registrations, the requirement is that these entities will only have to submit one report for any individual event. For example, if an entity is registered as a Reliability Coordinator, Balancing Authority and Transmission Operator, the entity would only submit one report for a particular event rather submitting three reports as each individual registered entity.

Law Enforcement Reporting

The reliability objective of EOP-004-4 is to improve the reliability of the Bulk Electric System by requiring the reporting of events by Responsible Entities. Certain outages, such as those due to vandalism and terrorism, may not be reasonably preventable. These are the types of events that should be reported to law enforcement. Entities rely upon law enforcement agencies to respond to and investigate those events which have the potential to impact a wider area of the BES. The inclusion of reporting to law enforcement enables and supports reliability principles such as protection of Bulk Electric System from malicious physical attack. The importance of BES awareness of the threat around them is essential to the effective operation and planning to mitigate the potential risk to the BES.

Stakeholders in the Reporting Process

- Industry
- NERC (ERO), Regional Entity
- FERC
- DOE
- NRC
- DHS – Federal
- Homeland Security- State
- State Regulators
- Local Law Enforcement
- State or Provincial Law Enforcement
- FBI
- Royal Canadian Mounted Police (RCMP)

The above stakeholders have an interest in the timely notification, communication and response to an incident at a Facility. The stakeholders have various levels of accountability and have a vested interest in the protection and response to ensure the reliability of the BES.

Supplemental Material

Example of Reporting Process including Law Enforcement

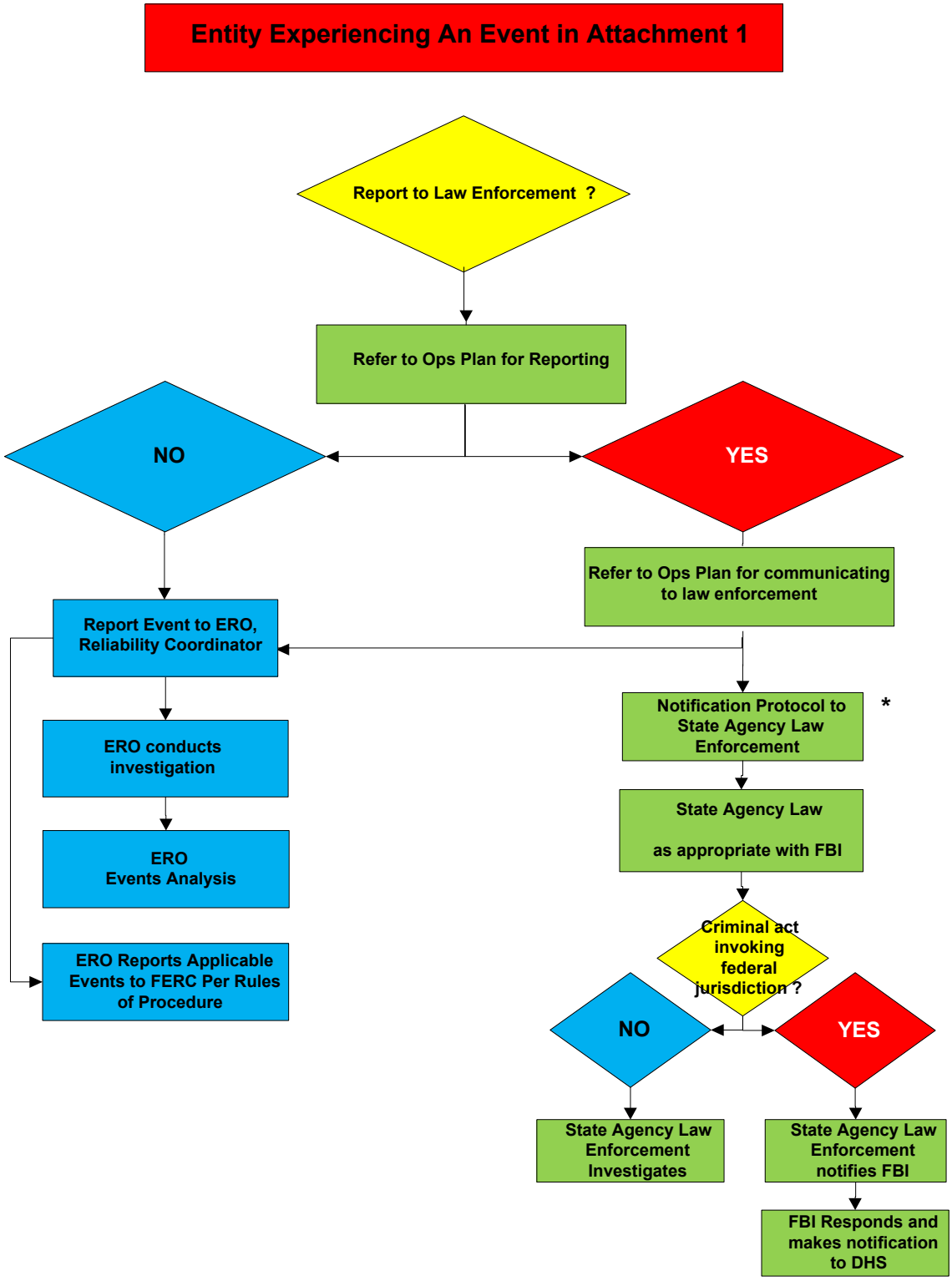

* Canadian entities will follow law enforcement protocols applicable in their jurisdictions

Potential Uses of Reportable Information

General situational awareness, correlation of data, trend identification, and identification of potential events of interest for further analysis in the ERO Event Analysis Process are a few potential uses for the information reported under this standard. The standard requires Functional Entities to report the incidents and provide information known at the time of the report. Further data gathering necessary for analysis is provided for under the ERO Event Analysis Program and the NERC Rules of Procedure. The NERC Rules of Procedure (section 800) provide an overview of the responsibilities of the ERO in regards to analysis and dissemination of information for reliability. Jurisdictional agencies (which may include DHS, FBI, NERC, RE, FERC, Provincial Regulators, and DOE) have other duties and responsibilities.

A. Introduction

1. **Title:** System Restoration from Blackstart Resources

2. **Number:** EOP-005-3

3. **Purpose:** Ensure plans, Facilities, and personnel are prepared to enable System restoration from Blackstart Resources to ensure reliability is maintained during restoration and priority is placed on restoring the Interconnection.

4. **Applicability:**

   4.1. Functional Entities:

   4.1.1. Transmission Operators

   4.1.2. Generator Operators

   4.1.3. Transmission Owners identified in the Transmission Operators restoration plan

   4.1.4. Distribution Providers identified in the Transmission Operators restoration plan

5. **Effective Date*:** See the Implementation Plan for EOP-005-3.

6. **Standard-Only Definition:** None

B. Requirements and Measures

R1. Each Transmission Operator shall develop and implement a restoration plan approved by its Reliability Coordinator. The restoration plan shall be implemented to restore the Transmission Operator's System following a Disturbance in which one or more areas of the Bulk Electric System (BES) shuts down and the use of Blackstart Resources is required to restore the shutdown area to a state whereby the choice of the next Load to be restored is not driven by the need to control frequency or voltage regardless of whether the Blackstart Resource is located within the Transmission Operator's System. The restoration plan shall include: *[Violation Risk Factor = High] [Time Horizon = Operations Planning, Real-time Operations]*

1.1. Strategies for System restoration that are coordinated with its Reliability Coordinator's high level strategy for restoring the Interconnection.

1.2. A description of how all Agreements or mutually-agreed upon procedures or protocols for off-site power requirements of nuclear power plants, including priority of restoration, will be fulfilled during System restoration.

1.3. Procedures for restoring interconnections with other Transmission Operators under the direction of its Reliability Coordinator.

1.4. Identification of each Blackstart Resource and its characteristics including but not limited to the following: the name of the Blackstart Resource, location, megawatt and megavar capacity, and type of unit.

1.5. Identification of Cranking Paths and initial switching requirements between each Blackstart Resource and the unit(s) to be started.

1.6. Identification of acceptable operating voltage and frequency limits during restoration.

1.7. Operating Processes to reestablish connections within the Transmission Operator's System for areas that have been restored and are prepared for reconnection.

1.8. Operating Processes to restore Loads required to restore the System, such as station service for substations, units to be restarted or stabilized, the Load needed to stabilize generation and frequency, and provide voltage control.

1.9. Operating Processes for transferring operations back to the Balancing Authority in accordance with its Reliability Coordinator's criteria.

M1. Each Transmission Operator shall have a dated, documented System restoration plan developed in accordance with Requirement R1 that has been approved by its Reliability Coordinator as shown with the documented approval from its Reliability Coordinator and will have evidence, such as operator logs, voice recordings or other operating documentation, voice recordings or other communication documentation to show that its restoration plan was implemented for times when a Disturbance has occurred, in accordance with Requirement R1.

R2. Each Transmission Operator shall provide the entities identified in its approved restoration plan with a description of any changes to their roles and specific tasks prior to the effective date of the plan. *[Violation Risk Factor = Medium] [Time Horizon = Operations Planning]*

M2. Each Transmission Operator shall have evidence such as dated electronic receipts or registered mail receipts that it provided the entities identified in its approved restoration plan with a description of any changes to their roles and specific tasks prior to the effective date of the plan in accordance with Requirement R2.

R3. Each Transmission Operator shall review its restoration plan and submit it to its Reliability Coordinator annually on a mutually-agreed, predetermined schedule. *[Violation Risk Factor = Medium] [Time Horizon = Operations Planning]*

M3. Each Transmission Operator shall have documentation such as a dated review signature sheet, revision histories, dated electronic receipts, or registered mail receipts, that it has annually reviewed and submitted the Transmission Operator's restoration plan to its Reliability Coordinator in accordance with Requirement R3.

R4. Each Transmission Operator shall submit its revised restoration plan to its Reliability Coordinator for approval, when the revision would change its ability to implement its restoration plan, as follows: *[Violation Risk Factor = Medium] [Time Horizon = Operations Planning]*

4.1. Within 90 calendar days after identifying any unplanned permanent BES modifications.

4.2. Prior to implementing a planned permanent BES modification subject to its Reliability Coordinator approval requirements per EOP-006.

M4. Each Transmission Operator shall have documentation such as dated review signature sheets, revision histories, dated electronic receipts, or registered mail receipts, that it has submitted the revised restoration plan to its Reliability Coordinator in accordance with Requirement R4.

R5. Each Transmission Operator shall have a copy of its latest Reliability Coordinator approved restoration plan within its primary and backup control rooms so that it is available to all of its System Operators prior to its effective date. *[Violation Risk Factor = Lower] [Time Horizon = Operations Planning]*

M5. Each Transmission Operator shall have documentation that it has made the latest Reliability Coordinator approved copy of its restoration plan, in electronic or hardcopy format, in its primary and backup control rooms and available to its System Operators prior to its effective date in accordance with Requirement R5.

R6. Each Transmission Operator shall verify through analysis of actual events, a combination of steady state and dynamic simulations, or testing that its restoration plan accomplishes its intended function. This shall be completed at least once every five years. Such analysis, simulations or testing shall verify: *[Violation Risk Factor = Medium] [Time Horizon = Long-term Planning]*

6.1. The capability of Blackstart Resources to meet the Real and Reactive Power requirements of the Cranking Paths and the dynamic capability to supply initial Loads.

6.2. The location and magnitude of Loads required to control voltages and frequency within acceptable operating limits.

6.3. The capability of generating resources required to control voltages and frequency within acceptable operating limits.

M6. Each Transmission Operator shall have documentation, such as power flow outputs, that it has verified that its latest restoration plan will accomplish its intended function in accordance with Requirement R6.

R7. Each Transmission Operator shall have Blackstart Resource testing requirements to verify that each Blackstart Resource is capable of meeting the requirements of its restoration plan. These Blackstart Resource testing requirements shall include: *[Violation Risk Factor = Medium] [Time Horizon = Operations Planning]*

7.1. The frequency of testing such that each Blackstart Resource is tested at least once every three calendar years.

7.2. A list of required tests including:

7.2.1. The ability to start the unit when isolated with no support from the BES or when designed to remain energized without connection to the remainder of the System.

7.2.2. The ability to energize a bus. If it is not possible to energize a bus during the test, the testing entity must affirm that the unit has the capability to energize a bus such as verifying that the breaker close coil relay can be energized with the voltage and frequency monitor controls disconnected from the synchronizing circuits.

7.3. The minimum duration of each of the required tests.

M7. Each Transmission Operator shall have documented Blackstart Resource testing requirements in accordance with Requirement R7.

R8. Each Transmission Operator shall include within its operations training program, annual System restoration training for its System Operators. This training program shall include training on the following: *[Violation Risk Factor = Medium] [Time Horizon = Operations Planning]*

8.1. System restoration plan including coordination with its Reliability Coordinator and Generator Operators included in the restoration plan.

8.2. Restoration priorities.

8.3. Building of cranking paths.

8.4. Synchronizing (re-energized sections of the System).

8.5. Transition of Demand and resource balance within its area to the Balancing Authority.

M8. Each Transmission Operator shall have an electronic or hard copy of the training program material provided for its System Operators for System restoration training in accordance with Requirement R8.

R9. Each Transmission Operator, each applicable Transmission Owner, and each applicable Distribution Provider shall provide a minimum of two hours of System restoration training every two calendar years to their field switching personnel identified as performing unique tasks associated with the Transmission Operator's restoration plan that are outside of their normal tasks. *[Violation Risk Factor = Medium] [Time Horizon = Operations Planning]*

M9. Each Transmission Operator, each applicable Transmission Owner, and each applicable Distribution Provider shall have an electronic or hard copy of the training program material provided to their field switching personnel for System restoration training and the corresponding training records including training dates and duration in accordance with Requirement R9.

R10. Each Transmission Operator shall participate in its Reliability Coordinator's restoration drills, exercises, or simulations as requested by its Reliability Coordinator. *[Violation Risk Factor = Medium] [Time Horizon = Operations Planning]*

M10. Each Transmission Operator shall have evidence that it participated in its Reliability Coordinator's restoration drills, exercises, or simulations as requested in accordance with Requirement R10.

R11. Each Transmission Operator and each Generator Operator with a Blackstart Resource shall have written Blackstart Resource Agreements or mutually agreed upon procedures or protocols, specifying the terms and conditions of their arrangement. Such Agreements shall include references to the Blackstart Resource testing requirements. *[Violation Risk Factor = Medium] [Time Horizon = Operations Planning]*

M11. Each Transmission Operator and Generator Operator with a Blackstart Resource shall have the dated Blackstart Resource Agreements or mutually agreed upon procedures or protocols in accordance with Requirement R11.

R12. Each Generator Operator with a Blackstart Resource shall have documented procedures for starting each Blackstart Resource and energizing a bus. *[Violation Risk Factor = Medium] [Time Horizon = Operations Planning]*

M12. Each Generator Operator with a Blackstart Resource shall have dated documented procedures on file for starting each unit and energizing a bus in accordance with Requirement R12.

R13. Each Generator Operator with a Blackstart Resource shall notify its Transmission Operator of any known changes to the capabilities of that Blackstart Resource affecting the ability to meet the Transmission Operator's restoration plan within 24 hours following such change. *[Violation Risk Factor = Medium] [Time Horizon = Operations Planning]*

M13. Each Generator Operator with a Blackstart Resource shall provide evidence, such as dated electronic receipts or registered mail receipts, showing that it notified its Transmission Operator of any known changes to its Blackstart Resource capabilities within 24 hours of such changes in accordance with Requirement R13.

R14. Each Generator Operator with a Blackstart Resource shall perform Blackstart Resource tests, and maintain records of such testing, in accordance with the testing requirements set by the Transmission Operator to verify that the Blackstart Resource can perform as specified in the restoration plan. *[Violation Risk Factor = Medium] [Time Horizon = Operations Planning]*

14.1. Testing records shall include at a minimum: name of the Blackstart Resource, unit tested, date of the test, duration of the test, time required to start the unit, an indication of any testing requirements not met under Requirement R7.

14.2. Each Generator Operator shall provide the blackstart test results within 30 calendar days following a request from its Reliability Coordinator or Transmission Operator.

M14. Each Generator Operator with a Blackstart Resource shall maintain dated documentation of its Blackstart Resource test results and shall have evidence such as e-mails with receipts or registered mail receipts, that it provided these records to its Reliability Coordinator and Transmission Operator when requested in accordance with Requirement R14.

R15. Each Generator Operator with a Blackstart Resource shall provide a minimum of two hours of training every two calendar years to each of its operating personnel responsible for the startup of its Blackstart Resource generation units and energizing a bus. The training program shall include training on the following: *[Violation Risk Factor = Medium] [Time Horizon = Operations Planning]*

15.1. System restoration plan including coordination with the Transmission Operator

15.2. The procedures documented in Requirement R12

M15. Each Generator Operator with a Blackstart Resource shall have an electronic or hard copy of the training program material provided to its operating personnel responsible for the startup, energizing a bus and synchronization of its Blackstart Resource generation units and a copy of its dated training records including training dates and durations showing that it has provided training in accordance with Requirement R15.

R16. Each Generator Operator shall participate in its Reliability Coordinator's restoration drills, exercises, or simulations as requested by its Reliability Coordinator. *[Violation Risk Factor = Medium] [Time Horizon = Operations Planning]*

M16. Each Generator Operator shall have evidence that it participated in its Reliability Coordinator's restoration drills, exercises, or simulations if requested to do so in accordance with Requirement R16.

C. Compliance

1. Compliance Monitoring Process

1.1. Compliance Enforcement Authority: Regional Entity
The British Columbia Utilities Commission.

1.2. Evidence Retention:
The following evidence retention period(s) identify the period of time an entity is required to retain specific evidence to demonstrate compliance. For instances where the evidence retention period specified below is shorter than the time since the last audit, the Compliance Enforcement Authority may ask an entity to provide other evidence to show that it was compliant for the full-time period since the last audit.

The applicable entity shall keep data or evidence to show compliance as identified below unless directed by its Compliance Enforcement Authority to retain specific evidence for a longer period of time as part of an investigation.

The Transmission Operator shall keep data or evidence to show compliance as identified below unless directed by its Compliance Enforcement Authority to retain specific evidence for a longer period of time as part of an investigation:

- Approved restoration plan and any restoration plans in effect since the last compliance audit for Requirement R1, Measure M1.
- Provided the entities identified in its approved restoration plan with a description of any changes to their roles and specific tasks prior to the effective date of the plan for the current calendar year and three prior calendar years for Requirement R2, Measure M2.
- Submission of the Transmission Operator's annually-reviewed restoration plan to its Reliability Coordinator for the current calendar year and three prior calendar years for Requirement R3, Measure M3.
- Submission of a revised restoration plan to its Reliability Coordinator for all versions for the current calendar year and the prior three calendar years for Requirement R4, Measure M4.
- The current restoration plan approved by its Reliability Coordinator and any restoration plans for the last three calendar years that was made available in its control rooms for Requirement R5, Measure M5.
- The verification results for the current, approved restoration plan and the previous approved restoration plan for Requirement R6, Measure M6.
- The verification process and results for the current Blackstart Resource testing requirements and the last previous Blackstart Resource testing requirements for Requirement R7, Measure M7.
- Training program materials or descriptions for three calendar years for Requirement R8, Measure M8.
- Records of participation in all requested Reliability Coordinator restoration drills, exercises, or simulations since its last compliance audit, as well as one previous compliance audit period for Requirement R10, Measure M10.

If a Transmission Operator is found non-compliant for any requirement, it shall keep information related to the non-compliance until mitigation is complete and approved or for the time period specified above, whichever is longer. The Transmission Operator, applicable Transmission Owner, and applicable Distribution Provider shall keep data or evidence to show compliance as identified below unless directed by its Compliance Enforcement Authority to retain specific evidence for a longer period of time as part of an investigation:

- Training program materials or descriptions and training records for three calendar years for Requirement R9, Measure M9.

If a Transmission Operator, applicable Transmission Owner, or applicable Distribution Provider is found non-compliant for any requirement, it shall keep information related to the non-compliance until mitigation is complete and approved or for the time period specified above, whichever is longer. .

The Transmission Operator and Generator Operator with a Blackstart Resource shall keep data or evidence to show compliance as identified below unless directed by its Compliance Enforcement Authority to retain specific evidence for a longer period of time as part of an investigation:

- Current Blackstart Resource Agreements and any Blackstart Resource Agreements or mutually agreed upon procedures or protocols in effect since its last compliance audit for Requirement R11, Measure M11.

The Generator Operator with a Blackstart Resource shall keep data or evidence to show compliance as identified below unless directed by its Compliance Enforcement Authority to retain specific evidence for a longer period of time as part of an investigation:

- Current documentation and any documentation in effect since its last compliance audit on procedures to start each Blackstart Resource and for energizing a bus for Requirement R12, Measure M12.
- Notification to its Transmission Operator of any known changes to its Blackstart Resource capabilities over the last three calendar years for Requirement R13, Measure M13.
- The verification test results for the current set of requirements and one previous set for its Blackstart Resources for Requirement R14, Measure M14.
- Training program materials and training records for three calendar years for Requirement R15, Measure M15.

If a Generation Operator with a Blackstart Resource is found non-compliant for any requirement, it shall keep information related to the non-compliance until mitigation is complete and approved or for the time period specified above, whichever is longer.

The Generator Operator shall keep data or evidence to show compliance as identified below unless directed by its Compliance Enforcement Authority to retain specific evidence for a longer period of time as part of an investigation:

- Records of participation in all requested Reliability Coordinator restoration drills, exercises, or simulations since its last compliance audit for Requirement R16, Measure M16.

If a Generation Operator is found non-compliant for any requirement, it shall keep information related to the non-compliance until mitigation is complete and approved or for the time period specified above, whichever is longer. The

Compliance Enforcement Authority shall keep the last compliance audit records and all requested and submitted subsequent compliance audit records.

1.3. Compliance Monitoring and Enforcement Program

As defined in the NERC Rules of Procedure, "Compliance Monitoring and Enforcement Program" refers to the identification of the processes that will be used to evaluate data or information for the purpose of assessing performance or outcomes with the associated Reliability Standard.

Violation Severity Levels

R #	Violation Severity Levels			
	Lower VSL	Moderate VSL	High VSL	Severe VSL
R1.	The Transmission Operator has an approved plan but failed to comply with one of the requirement parts within Requirement R1.	The Transmission Operator has an approved plan but failed to comply with two of the requirement parts within Requirement R1.	The Transmission Operator has an approved plan but failed to comply with three or more of the requirement parts within Requirement R1.	The Transmission Operator does not have an approved restoration plan. OR The Transmission Operator has an approved restoration plan, but failed to implement the applicable requirement parts within Requirement R1.
R2.	The Transmission Operator failed to provide one of the entities identified in its approved restoration plan with a description of any changes to their roles and specific tasks prior to the effective date of the plan.	The Transmission Operator failed to provide two of the entities identified in its approved restoration plan with a description of any changes to their roles and specific tasks prior to the effective date of the plan.	The Transmission Operator failed to provide three of the entities identified in its approved restoration plan with a description of any changes to their roles and specific tasks prior to the effective date of the plan.	The Transmission Operator failed to provide four or more of the entities identified in its approved restoration plan with a description of any changes to their roles and specific tasks prior to the effective date of the plan. OR Transmission Operator failed to provide at least half of the entities identified in its

R #	Violation Severity Levels			
	Lower VSL	Moderate VSL	High VSL	Severe VSL
				approved restoration plan with a description of any changes to their roles and specific tasks prior to the effective date.
R3.	The Transmission Operator submitted the reviewed restoration plan within 30 calendar days after the mutually-agreed, predetermined schedule.	The Transmission Operator submitted the reviewed restoration plan more than 30 and less than or equal to 60 calendar days after the mutually-agreed, predetermined schedule.	The Transmission Operator submitted the reviewed restoration plan more than 60 and less than or equal to 90 calendar days after the mutually-agreed, predetermined schedule.	The Transmission Operator submitted the reviewed restoration plan more than 90 calendar days after the mutually-agreed, predetermined schedule.
R4.	The Transmission Operator failed to submit its revised restoration plan to its Reliability Coordinator within 90 calendar days of an unplanned permanent System BES modification.	The Transmission Operator submitted its revised restoration plan to its Reliability Coordinator between 91 calendar days and 120 calendar days of an unplanned permanent System BES modification.	The Transmission Operator submitted its revised restoration plan to its Reliability Coordinator between 121 calendar days and 150 calendar days of an unplanned permanent System BES modification.	The Transmission Operator has failed to submit its revised restoration plan to its Reliability Coordinator within 150 calendar days of an unplanned permanent System BES modification. OR The Transmission Operator failed to submit its revised restoration plan to its Reliability Coordinator prior to a planned permanent BES

R #	Violation Severity Levels			
	Lower VSL	Moderate VSL	High VSL	Severe VSL
				modification.
R5.	N/A	N/A	N/A	The Transmission Operator did not make the latest Reliability Coordinator approved restoration plan available in its primary and backup control rooms prior to its effective date.
R6.	The Transmission Operator performed the verification within the required timeframe but did not comply with one of the requirement parts.	The Transmission Operator performed the verification within the required timeframe but did not comply with two of the requirement parts.	The Transmission Operator performed the verification but did not complete it within the required time frame.	The Transmission Operator did not perform the verification or it took more than six calendar years to complete the verification. OR The Transmission Operator performed the verification within the required timeframe but did not comply with any of the requirement parts.
R7.	N/A	N/A	N/A	The Transmission Operator's Blackstart Resource testing requirements do not address one or more of the

R #	Violation Severity Levels			
	Lower VSL	Moderate VSL	High VSL	Severe VSL
				requirement parts of Requirement R7.
R8.	The Transmission Operator's training does not address one of the requirement parts of Requirement R8.	The Transmission Operator's training does not address two of the requirement parts of Requirement R8.	The Transmission Operator's training does not address three or more of the requirement parts of Requirement R8.	The Transmission Operator has not included System restoration training in its operations training program.
R9.	The Transmission Operator, applicable Transmission Owner, or applicable Distribution Provider failed to train 5% or less of the personnel required by Requirement R9 within a two-calendar-year period.	The Transmission Operator, applicable Transmission Owner, or applicable Distribution Provider failed to train more than 5% and up to 10% of the personnel required by Requirement R9 within a two-calendar-year period.	The Transmission Operator, applicable Transmission Owner, or applicable Distribution Provider failed to train more than 10% and up to 15% of the personnel required by Requirement R9 two-calendar-year period.	The Transmission Operator, applicable Transmission Owner, or applicable Distribution Provider failed to train more than 15% of the personnel required by Requirement R9 within a two-calendar-year period.
R10.	N/A	N/A	N/A	The Transmission Operator has failed to comply with a request for its participation from its Reliability Coordinator.
R11.	N/A	The Transmission Operator and Generator Operator with a Blackstart Resource	N/A	The Transmission Operator and Generator Operator with a Blackstart resource do

R #	Violation Severity Levels			
	Lower VSL	Moderate VSL	High VSL	Severe VSL
		do not reference Blackstart Resource Testing requirements in their written Blackstart Resource Agreements or mutually-agreed upon procedures or protocols.		not have a written Blackstart Resource Agreement or mutually-agreed upon procedure or protocol.
R12.	N/A	N/A	N/A	The Generator Operator does not have documented starting and bus energizing procedures for each Blackstart Resource.
R13.	The Generator Operator with a Blackstart Resource did not notify the Transmission Operator of a known change in Blackstart Resource capability affecting the ability to meet the Transmission Operator's restoration plan within 24 hours but did make the notification within 48 hours.	The Generator Operator with a Blackstart Resource did not notify the Transmission Operator of a known change in Blackstart Resource capability affecting the ability to meet the Transmission Operator's restoration plan within 48 hours but did make the notification within 72 hours.	The Generator Operator with a Blackstart Resource did not notify the Transmission Operator of a known change in Blackstart Resource capability affecting the ability to meet the Transmission Operator's restoration plan within 72 hours but did make the notification within 96 hours.	The Generator Operator with a Blackstart Resource did not notify the Transmission Operator of a known change in Blackstart Resource capability affecting the ability to meet the Transmission Operator's restoration plan for more than 96 hours.
R14.	The Generator Operator with a Blackstart Resource	The Generator Operator with a Blackstart Resource	The Generator Operator with a Blackstart Resource	The Generator Operator with a Blackstart Resource

R #	Violation Severity Levels			
	Lower VSL	Moderate VSL	High VSL	Severe VSL
	performed tests and maintained records but the records did not include all of the items in Requirement R14, Part 14.1. OR The Generator Operator did not supply the Blackstart Resource testing records as requested for 31 to 60 calendar days after the request.	performed tests and maintained records but did not supply the Blackstart Resource testing records as requested for 61 to 90 calendar days after the request.	performed tests but either did not maintain records or did not supply the Blackstart Resource testing records as requested within 91 or more calendar days after the request.	did not perform Blackstart Resource tests.
R15.	The Generator Operator with a Blackstart Resource did not train less than or equal to 10% of the personnel required by Requirement R15 within a two-calendar-year period.	The Generator Operator with a Blackstart Resource did not train more than 10% and less than or equal to 25% of the personnel required by Requirement R15 within a two-calendar-year period.	The Generator Operator with a Blackstart Resource did not train more than 25% and less than or equal to 50% of the personnel required by Requirement R15 within a two-calendar-year period.	The Generator Operator with a Blackstart Resource did not train more than 50% of the personnel required by Requirement R15 within a two-calendar-year period.
R16.	N/A	N/A	N/A	The Generator Operator failed to participate in its Reliability Coordinator's restoration drills, exercises, or simulations as requested

R #	Violation Severity Levels			
	Lower VSL	Moderate VSL	High VSL	Severe VSL
				by its Reliability Coordinator.

D. Regional Variances

None.

E. Associated Documents

Link to the Implementation Plan and other important associated documents.

Version History

Version	Date	Action	Change Tracking
0	April 1, 2005	Effective Date	New
0	August 8, 2005	Removed "Proposed" from Effective Date	Errata
1	May 2, 2007	Approved by the Board of Trustees	Revised
2		Revisions pursuant to Project 2006-03	Updated testing requirements Incorporated Attachment 1 into the requirements. Updated Measures and Compliance to match new requirements
2	August 5, 2009	Adopted by Board of Trustees	Revised
2	March 17, 2011	Order issued by FERC approving EOP-005-2 (approval effective 5/23/11)	
2	February 7, 2013	R3.1 and associated elements approved by NERC Board of Trustees for retirement as part of the Paragraph 81 project (Project 2013-02) pending applicable regulatory approval	
2	July 1, 2013	Updated VRFs and VSLs based on June 24, 2013 approval	
2	November 21, 2013	R3.1 and associated elements approved by FERC for retirement as part of the Paragraph 81 project (Project 2013-02)	
3	February 9, 2017	Adopted by the NERC Board of Trustees	Revised
3	January 18,	FERC order issued approving EOP-	

	2018	005-3. Docket No. RM17-12-000.	

Rationale

Rationale for Requirement R4: As previously written, Requirement R4 addressed (in one sentence) two restoration plan update items that a Transmission Operator must perform: (1) the restoration plan must be updated within 90 calendar days after identifying any unplanned permanent System modifications and (2) the restoration plan must be updated prior to implementing a planned BES modification. The phrase: "… that would change the implementation of its restoration plan" appeared to apply to both types of changes. There was no time frame specified for updating the restoration plan for a planned BES modification; although one could infer that "90 calendar days" is intended to be the same time frame for both unplanned and planned modifications. Furthermore, the distinction between "System modifications" for unplanned changes and "BES modifications" for planned changes has been seen as confusing to some Responsible Entities.

The references to permanent unplanned and planned BES modifications that will change the ability to implement the RC-approved restoration plan are intended to require a Responsible Entity to submit a revised restoration plan to the RC when the modification would substantively change the TOP's ability to implement the restoration plan or impact the RC's ability to monitor and direct restoration efforts. The intent is not to require a TOP to submit changes that do not substantively change the restoration plan or the RCs ability to monitor and direct the restoration efforts. Examples of instances that do not require update and submission of a restoration plan include element number changes, device changes, or administrative changes that have no significance to the implementation of the plan.

In addition, the timeframes referenced in Requirement R4, Part 4.2 for a permanent planned BES modification directs the Responsible Entity to EOP-006-2, Requirement R5.1 and EOP-006-3, Requirement R5, Part 5.1, which states that the RC shall approve or disapprove the TOPs submitted restoration plan within 30 days of receipt. This allows the Responsible Entity to coordinate submission with the RC based on the RCs specific requirements.

Rationale for Requirement R6: Dynamic simulations should simulate frequency and voltage response. It is the intent of the EOP SDT that the simulation provides for the feedback of the System performance as generation and Load are added.

Rationale for Requirement R8: The addition of Requirement 8, Part 8.5 allows operating personnel to gain experience on all stages of restoration, including coordination needed transferring Demand and resource balance operations, back to the Balancing Authority in accordance with Requirement R1, Part 1.9.

Rationale for Requirement R9: The intent of "unique tasks" are those tasks that are defined by the Transmission Operator, the Transmission Owner, and the Distribution Provider.

A. Introduction

1. **Title:** System Restoration Coordination
2. **Number:** EOP-006-3
3. **Purpose:** Ensure plans are established and personnel are prepared to enable effective coordination of the System restoration process to ensure reliability is maintained during restoration and priority is placed on restoring the Interconnection.
4. **Applicability:**
   - **4.1. Functional Entities:**
     - **4.1.1.** Reliability Coordinators
5. **Proposed Effective Date*:** See the Implementation Plan for EOP-006-3.
6. **Standard-Only Definition:** None

B. Requirements and Measures

R1. Each Reliability Coordinator shall develop and implement a Reliability Coordinator Area restoration plan. The scope of the Reliability Coordinator's restoration plan starts when Blackstart Resources are utilized to re-energize a shutdown area of the Bulk Electric System (BES), or separation has occurred between neighboring Reliability Coordinators, or an energized island has been formed on the BES within the Reliability Coordinator Area. The scope of the Reliability Coordinator's restoration plan ends when all of its Transmission Operators are interconnected and its Reliability Coordinator Area is connected to all of its neighboring Reliability Coordinator Areas. The restoration plan shall include: *[Violation Risk Factor = High] [Time Horizon = Operations Planning, Real-time Operations]*

1.1. A description of the high-level strategy to be employed during restoration events for restoring the Interconnection, including minimum criteria for meeting the objectives of the Reliability Coordinator's restoration plan.

1.2. Criteria and conditions for re-establishing interconnections with other Transmission Operators within its Reliability Coordinator Area, with Transmission Operators in other Reliability Coordinator Areas, and with other Reliability Coordinators.

1.3. Reporting requirements for the entities within the Reliability Coordinator Area during a restoration event.

1.4. Criteria for sharing information regarding restoration with neighboring Reliability Coordinators and with Transmission Operators and Balancing Authorities within its Reliability Coordinator Area.

1.5. Identification of the Reliability Coordinator as the primary contact for disseminating information regarding restoration to neighboring Reliability

Coordinators, and to Transmission Operators, and Balancing Authorities within its Reliability Coordinator Area.

1.6. Criteria for transferring operations and authority back to the Balancing Authority.

M1. Each Reliability Coordinator shall have available a dated copy of its restoration plan and will have evidence, such as operator logs or other operating documentation, voice recordings, or other communication documentation to show that its restoration plan was implemented in accordance with Requirement R1.

R2. The Reliability Coordinator shall distribute its most recent Reliability Coordinator Area restoration plan to each of its Transmission Operators and neighboring Reliability Coordinators within 30 calendar days of creation or revision. *[Violation Risk Factor = Lower] [Time Horizon = Operations Planning]*

M2. Each Reliability Coordinator shall provide evidence such as electronic receipts, posting to a secure website with notification to affected entities, or registered mail receipts, that its most recent restoration plan has been distributed in accordance with Requirement R2.

R3. Each Reliability Coordinator shall review its restoration plan within 13 calendar months of the last review. *[Violation Risk Factor = Medium] [Time Horizon = Operations Planning]*

M3. Each Reliability Coordinator shall provide evidence such as a review signature sheet, or revision histories, that it has reviewed its restoration plan within 13 calendar months of the last review in accordance with Requirement R3.

R4. Each Reliability Coordinator shall review its neighboring Reliability Coordinator's restoration plans and provide written notification of any conflicts discovered during that review within 60 calendar days of receipt. *[Violation Risk Factor = Medium] [Time Horizon = Operations Planning]*

4.1. If a Reliability Coordinator finds conflicts between its restoration plans and any of its neighbors, the conflicts shall be resolved within 30 calendar days of receipt of written notification.

M4. Each Reliability Coordinator shall provide evidence such as dated review signature sheets or electronic receipt that it has reviewed its neighboring Reliability Coordinator's restoration plans and resolved any conflicts within the timing requirements of Requirement R4 and Requirement R4, Part 4.1.

R5. Each Reliability Coordinator shall review the restoration plans required by EOP-005 of the Transmission Operators within its Reliability Coordinator Area. *[Violation Risk Factor = Medium] [Time Horizon = Operations Planning]*

5.1. The Reliability Coordinator shall determine whether the Transmission Operator's restoration plan is coordinated and compatible with the Reliability Coordinator's restoration plan and other Transmission Operators' restoration plans within its

Reliability Coordinator Area. The Reliability Coordinator shall provide notification to the Transmission Operator of approval or disapproval, with stated reasons, of the Transmission Operator's submitted restoration plan within 30 calendar days following the receipt of the restoration plan from the Transmission Operator.

M5. Each Reliability Coordinator shall provide evidence such as a dated review signature sheet or electronic receipt that it has reviewed, approved or disapproved, and notified its Transmission Operators within 30 calendar days following the receipt of the restoration plan from the Transmission Operator in accordance with Requirement R5.

R6. Each Reliability Coordinator shall have a copy of its latest restoration plan and copies of the latest approved restoration plan of each Transmission Operator in its Reliability Coordinator Area within its primary and backup control rooms so that it is available to all of its System Operators prior to the effective date. *[Violation Risk Factor = Lower] [Time Horizon = Operations Planning]*

M6. Each Reliability Coordinator shall have documentation such as electronic receipts that it has made the latest copy of its restoration plan and copies of the latest approved restoration plan of each Transmission Operator in its Reliability Coordinator Area available in its primary and backup control rooms and to each of its System Operators prior to the effective date in accordance with Requirement R6.

R7. Each Reliability Coordinator shall include within its operations training program, annual System restoration training for its System Operators. This training program shall address the following: *[Violation Risk Factor = Medium] [Time Horizon = Operations Planning]*

7.1. The coordination role of the Reliability Coordinator; and

7.2. Re-establishing the Interconnection.

M7. Each Reliability Coordinator shall have an electronic copy or hard copy of its training records available showing that it has provided training in accordance with Requirement R7.

R8. Each Reliability Coordinator shall conduct two System restoration drills, exercises, or simulations per calendar year, which shall include the Transmission Operators and Generator Operators as dictated by the particular scope of the drill, exercise, or simulation that is being conducted. *[Violation Risk Factor = Medium] [Time Horizon = Operations Planning]*

8.1. Each Reliability Coordinator shall request each Transmission Operator identified in its restoration plan and each Generator Operator identified in the Transmission Operators' restoration plans to participate in a drill, exercise, or simulation at least once every two calendar years.

M8. Each Reliability Coordinator shall have evidence, such as dated electronic documents, that it conducted two System restoration drills, exercises, or simulations per calendar year in accordance with Requirement R8. And each Reliability Coordinator shall have

evidence that the Reliability Coordinator requested each applicable Transmission Operator and Generator Operator to participate per Requirement R8 and Requirement R8, Part 8.1.

C. Compliance

1. Compliance Monitoring Process

1.1. Compliance Enforcement Authority:
The British Columbia Utilities Commission.

1.2. Evidence Retention:
The following evidence retention period(s) identify the period of time an entity is required to retain specific evidence to demonstrate compliance. For instances where the evidence retention period specified below is shorter than the time since the last audit, the Compliance Enforcement Authority may ask an entity to provide other evidence to show that it was compliant for the full-time period since the last audit.

The applicable entity shall keep data or evidence to show compliance as identified below unless directed by its Compliance Enforcement Authority to retain specific evidence for a longer period of time as part of an investigation.

- The current restoration plan and any restoration plans in effect since the last compliance audit for Requirement R1, Measure M1.
- Distribution of its most recent restoration plan and any restoration plans in effect for the current calendar year and three prior calendar years for Requirement R2, Measure M2.
- It's reviewed restoration plan for the current review period and the last three prior review periods for Requirement R3, Measure M3.
- Reviewed copies of neighboring Reliability Coordinator restoration plans for the current calendar year and the three prior calendar years for Requirement R4, Measure M4.
- The reviewed restoration plans for the current calendar year and the last three prior calendar years for Requirement R5, Measure M5.
- The current, approved restoration plan and any restoration plans in effect for the last three calendar years was made available in its control rooms for Requirement R6, Measure M6.
- Actual training program materials or descriptions for three calendar years for Requirements R7, Measure M7.

- Records of all Reliability Coordinator restoration drills, exercises, or simulations since its last compliance audit, as well as one previous compliance audit period for Requirement R8, Measure M8.

If a Reliability Coordinator is found non-compliant, it shall keep information related to the non-compliance until mitigation is complete and approved or for the time period specified above, whichever is longer.

The Compliance Enforcement Authority shall keep the last audit records and all requested and submitted subsequent audit records.

1.3. Compliance Monitoring and Enforcement Program

As defined in the NERC Rules of Procedure, "Compliance Monitoring and Enforcement Program" refers to the identification of the processes that will be used to evaluate data or information for the purpose of assessing performance or outcomes with the associated Reliability Standard.

Violation Severity Levels

R #	Violation Severity Levels			
	Lower VSL	Moderate VSL	High VSL	Severe VSL
R1.	The Reliability Coordinator failed to include one requirement part of Requirement R1 within its restoration plan.	The Reliability Coordinator failed to include two requirement parts of Requirement R1 within its restoration plan.	The Reliability Coordinator failed to include three of the requirements parts of Requirement R1 within its restoration plan.	The Reliability Coordinator failed to include four or more of the requirement parts within its restoration plan. OR The Reliability Coordinator had a restoration plan, but failed to implement it.
R2.	The Reliability Coordinator distributed the most recent Reliability Coordinator Area restoration plan to the entities identified in Requirement R2 but was more than 30 calendar days late but less than 60 calendar days late.	The Reliability Coordinator distributed the most recent Reliability Coordinator Area restoration plan to the entities identified in Requirement R2 but was 60 calendar days or more late, but less than 90 calendar days late.	The Reliability Coordinator distributed the most recent Reliability Coordinator Area restoration plan to the entities identified in Requirement R2 but was 90 or more calendar days late but less than 120 calendar days late.	The Reliability Coordinator distributed the most recent Reliability Coordinator Area restoration plan to entities identified in Requirement R2 but was 120 calendar days or more late.
R3.	N/A	N/A	N/A	The Reliability Coordinator did not review its restoration plan within 13 calendar months of the last review.

R #	Violation Severity Levels			
	Lower VSL	Moderate VSL	High VSL	Severe VSL
R4.	The Reliability Coordinator reviewed the submitted restoration plans from its neighboring Reliability Coordinators within 60 calendar days of receipt, and resolved conflicts between 31 and 60 calendar days following written notification.	The Reliability Coordinator reviewed the submitted restoration plans from its neighboring Reliability Coordinators within 60 calendar days of receipt and resolved conflicts between 61 and 90 calendar days following written notification.	The Reliability Coordinator reviewed the submitted restoration plans from its neighboring Reliability Coordinators within 60 calendar days of receipt and resolved conflicts 91 or more calendar days following written notification.	The Reliability Coordinator did not review the submitted restoration plans from its neighboring Reliability Coordinators within 60 calendar days of receipt.
R5.	The Reliability Coordinator did not review and approve/disapprove the submitted restoration plans, with stated reasons for disapproval, from its Transmission Operators and neighboring Reliability Coordinators within 30 calendar days of receipt but did review and approve/disapprove the plans within 45 calendar days of receipt. OR	The Reliability Coordinator did not review and approve/disapprove the submitted restoration plans, with stated reasons for disapproval, from its Transmission Operators and neighboring Reliability Coordinators within 30 calendar days of receipt but did review and approve/disapprove the plans within 60 calendar days of receipt. OR	The Reliability Coordinator did not review and approve/disapprove the submitted restoration plans, with stated reasons for disapproval, from its Transmission Operators and neighboring Reliability Coordinators within 30 calendar days of receipt but did review and approve/disapprove the plans within 90 calendar days of receipt. OR	The Reliability Coordinator did not review and approve/disapprove the submitted restoration plans, with stated reasons for disapproval, from its Transmission Operators and neighboring Reliability Coordinators for more than 90 calendar days of receipt. OR The Reliability Coordinator failed to notify the Transmission Operator of its

R #	Violation Severity Levels			
	Lower VSL	Moderate VSL	High VSL	Severe VSL
	The Reliability Coordinator failed to notify the Transmission Operator of its approval or disapproval with stated reasons for disapproval within 30 calendar days of receipt but did notify the Transmission Operator of its approval or disapproval with reasons within 45 calendar days of receipt.	The Reliability Coordinator failed to notify the Transmission Operator of its approval or disapproval with stated reasons for disapproval within 30 calendar days of receipt, but did notify the Transmission Operator of its approval or disapproval with reasons within 60 calendar days of receipt	The Reliability Coordinator failed to notify the Transmission Operator of its approval or disapproval with stated reasons for disapproval within 30 calendar days of receipt but did notify the Transmission Operator of its approval or disapproval with reasons within 90 calendar days of receipt.	approval or disapproval with stated reasons for disapproval for more than 90 calendar days of receipt.
R6.	N/A	N/A	The Reliability Coordinator did not have a copy of the latest approved restoration plan of all Transmission Operators in its Reliability Coordinator Area within its primary and backup control rooms prior to the effective date.	The Reliability Coordinator did not have a copy of its latest restoration plan within its primary and backup control rooms prior to the effective date.
R7.	N/A	N/A	The Reliability Coordinator included the annual System restoration training within its operations training program,	The Reliability Coordinator did not include the annual System restoration training within its operations training

R #	Violation Severity Levels			
	Lower VSL	Moderate VSL	High VSL	Severe VSL
			but did not address both of the requirement parts.	program.
R8.	N/A	The Reliability Coordinator only held one restoration drill, exercise, or simulation during the calendar year. OR The Reliability Coordinator did not request each applicable Transmission Operator or Generator Operator identified in its restoration plan to participate in a drill, exercise, or simulation at least once every two calendar years.	N/A	The Reliability Coordinator did not hold a restoration drill, exercise, or simulation during the calendar year.

D. Regional Variances

None.

E. Associated Documents

Link to the Implementation Plan and other important associated documents.

Version History

Version	Date	Action	Change Tracking
0	April 1, 2005	Effective Date	New
0	August 8, 2005	Removed “Proposed” from Effective Date	Errata
1	Nov. 1, 2006	Adopted by Board of Trustees	Revised
2		Revisions pursuant to Project 2006-03	Updated Measures and Compliance to match new Requirements
2	August 5, 2009	Adopted by Board of Trustees	Revised
2	March 17, 2011	Order issued by FERC approving EOP-006-2 (approval effective 5/23/11)	
2	July 1, 2013	Updated VRFs and VSLs based on June 24, 2013 approval.	
3	February 9, 2017	Adopted by the NERC Board of Trustees	Revised
3	January 18, 2018	FERC order issued approving EOP-006-3. Docket No. RM17-12-000.	

A. Introduction

1. **Title:** Loss of Control Center Functionality
2. **Number:** EOP-008-2
3. **Purpose:** Ensure continued reliable operations of the Bulk Electric System (BES) in the event that a control center becomes inoperable.
4. **Applicability:**
   - **4.1. Functional Entities:**
     - **4.1.1.** Reliability Coordinator
     - **4.1.2.** Transmission Operator
     - **4.1.3.** Balancing Authority
5. **Effective Date*:** See the Implementation Plan for EOP-008-2.
6. **Standard-Only Definition:** None

B. Requirements and Measures

R1. Each Reliability Coordinator, Balancing Authority, and Transmission Operator shall have a current Operating Plan describing the manner in which it continues to meet its functional obligations with regard to the reliable operations of the BES in the event that its primary control center functionality is lost. This Operating Plan for backup functionality shall include: *[Violation Risk Factor = Medium] [Time Horizon = Operations Planning]*

1.1. The location and method of implementation for providing backup functionality.

1.2. A summary description of the elements required to support the backup functionality. These elements shall include:

- **1.2.1.** Tools and applications to ensure that System Operators have situational awareness of the BES.
- **1.2.2.** Data exchange capabilities.
- **1.2.3.** Interpersonal Communications.
- **1.2.4.** Power source(s).
- **1.2.5.** Physical and cyber security.

1.3. An Operating Process for keeping the backup functionality consistent with the primary control center.

1.4. Operating Procedures, including decision authority, for use in determining when to implement the Operating Plan for backup functionality.

1.5. A transition period between the loss of primary control center functionality and the time to fully implement the backup functionality that is less than or equal to

two hours.

1.6. An Operating Process describing the actions to be taken during the transition period between the loss of primary control center functionality and the time to fully implement backup functionality elements identified in Requirement R1, Part 1.2. The Operating Process shall include:

1.6.1. A list of all entities to notify when there is a change in operating locations.

1.6.2. Actions to manage the risk to the BES during the transition from primary to backup functionality, as well as during outages of the primary or backup functionality.

1.6.3. Identification of the roles for personnel involved during the initiation and implementation of the Operating Plan for backup functionality.

M1. Each Reliability Coordinator, Balancing Authority, and Transmission Operator shall have a dated, current, and in effect Operating Plan for backup functionality in accordance with Requirement R1, in electronic or hardcopy format.

R2. Each Reliability Coordinator, Balancing Authority, and Transmission Operator shall have a copy of its current Operating Plan for backup functionality available at its primary control center and at the location providing backup functionality. *[Violation Risk Factor = Lower] [Time Horizon = Operations Planning]*

M2. Each Reliability Coordinator, Balancing Authority, and Transmission Operator shall have a dated, current, and in effect copy of its Operating Plan for backup functionality in accordance with Requirement R2, in electronic or hardcopy format, available at its primary control center and at the location providing backup functionality.

R3. Each Reliability Coordinator shall have a backup control center facility (provided through its own dedicated backup facility or at another entity's control center staffed with certified Reliability Coordinator operators when control has been transferred to the backup facility) that provides the functionality required for maintaining compliance with all Reliability Standards are applicable to the primary control center functionality. To avoid requiring a tertiary facility, a backup facility is not required during: *[Violation Risk Factor = High] [Time Horizon = Operations Planning]*

- Planned outages of the primary or backup facilities of two weeks or less
- Unplanned outages of the primary or backup facilities

M3. Each Reliability Coordinator shall provide dated evidence that it has a backup control center facility (provided through its own dedicated backup facility or at another entity's control center staffed with certified Reliability Coordinator operators when control has been transferred to the backup facility) that provides the functionality required for maintaining compliance with all Reliability Standards that are applicable to the primary control center functionality in accordance with Requirement R3.

R4. Each Balancing Authority and Transmission Operator shall have backup functionality (provided either through a facility or contracted services staffed by applicable certified operators when control has been transferred to the backup functionality location) that includes monitoring, control, logging, and alarming sufficient for maintaining compliance with all Reliability Standards that are applicable to a Balancing Authority's and Transmission Operator's primary control center functionality. To avoid requiring tertiary functionality, backup functionality is not required during: *[Violation Risk Factor = High] [Time Horizon = Operations Planning]*

- Planned outages of the primary or backup functionality of two weeks or less
- Unplanned outages of the primary or backup functionality

M4. Each Balancing Authority and Transmission Operator shall provide dated evidence that its backup functionality (provided either through a facility or contracted services staffed by applicable certified operators when control has been transferred to the backup functionality location) includes monitoring, control, logging, and alarming sufficient for maintaining compliance with all Reliability Standards that are applicable to a Balancing Authority's or Transmission Operator's primary control center functionality in accordance with Requirement R4.

R5. Each Reliability Coordinator, Balancing Authority, and Transmission Operator, shall annually review and approve its Operating Plan for backup functionality. *[Violation Risk Factor = Medium] [Time Horizon = Operations Planning]*

5.1. An update and approval of the Operating Plan for backup functionality shall take place within sixty calendar days of any changes to any part of the Operating Plan described in Requirement R1.

M5. Each Reliability Coordinator, Balancing Authority, and Transmission Operator shall have evidence that its dated, current, and in effect Operating Plan for backup functionality, in electronic or hardcopy format, has been reviewed and approved annually and that it has been updated within sixty calendar days of any changes to any part of the Operating Plan described in Requirement R1 in accordance with Requirement R5.

R6. Each Reliability Coordinator, Balancing Authority, and Transmission Operator shall have primary and backup functionality that do not depend on each other for the control center functionality required to maintain compliance with Reliability Standards. *[Violation Risk Factor = Medium] [Time Horizon = Operations Planning]*

M6. Each Reliability Coordinator, Balancing Authority, and Transmission Operator shall have dated evidence that its primary and backup functionality do not depend on each other for the control center functionality required to maintain compliance with Reliability Standards in accordance with Requirement R6.

R7. Each Reliability Coordinator, Balancing Authority, and Transmission Operator shall conduct and document results of an annual test of its Operating Plan that demonstrates: *[Violation Risk Factor = Medium] [Time Horizon = Operations Planning]*

7.1. The transition time between the simulated loss of primary control center functionality and the time to fully implement the backup functionality.

7.2. The backup functionality for a minimum of two continuous hours.

M7. Each Reliability Coordinator, Balancing Authority, and Transmission Operator shall provide evidence such as dated records, that it has completed and documented its annual test of its Operating Plan for backup functionality, in accordance with Requirement R7.

R8. Each Reliability Coordinator, Balancing Authority, and Transmission Operator that has experienced a loss of its primary or backup functionality and that anticipates that the loss of primary or backup functionality will last for more than six calendar months shall provide a plan to its Regional Entity within six calendar months of the date when the functionality is lost, showing how it will re-establish primary or backup functionality. *[Violation Risk Factor = Medium] [Time Horizon = Operations Planning]*

M8. Each Reliability Coordinator, Balancing Authority, and Transmission Operator that has experienced a loss of their primary or backup functionality and that anticipates that the loss of primary or backup functionality will last for more than six calendar months shall provide evidence that a plan has been submitted to its Regional Entity within six calendar months of the date when the functionality is lost showing how it will re-establish primary or backup functionality in accordance with Requirement R8.

C. Compliance

1. Compliance Monitoring Process

1.1. Compliance Enforcement Authority:

The British Columbia Utilities Commission.

1.2. Evidence Retention:

The following evidence retention period(s) identify the period of time an entity is required to retain specific evidence to demonstrate compliance. For instances where the evidence retention period specified below is shorter than the time since the last audit, the Compliance Enforcement Authority may ask an entity to provide other evidence to show that it was compliant for the full-time period since the last audit.

The applicable entity shall keep data or evidence to show compliance as identified below unless directed by its Compliance Enforcement Authority to retain specific evidence for a longer period of time as part of an investigation.

- Each Reliability Coordinator, Balancing Authority, and Transmission Operator shall retain its dated, current, in effect Operating Plan for backup functionality plus all issuances of the Operating Plan for backup functionality since its last compliance audit in accordance with Measurement M1.
- Each Reliability Coordinator, Balancing Authority, and Transmission Operator shall retain a dated, current, in effect copy of its Operating Plan for backup functionality, with evidence of its last issue, available at its primary control center and at the location providing backup functionality, for the current year, in accordance with Measurement M2.
- Each Reliability Coordinator shall retain dated evidence for the time period since its last compliance audit, that it has demonstrated that it has a backup control center facility (provided through its own dedicated backup facility or at another entity's control center staffed with certified Reliability Coordinator operators when control has been transferred to the backup facility) in accordance with Requirement R3 that provides the functionality required for maintaining compliance with all Reliability Standards that are applicable to the primary control center functionality in accordance with Measurement M3.
- Each Balancing Authority and Transmission Operator shall retain dated evidence for the time period since its last compliance audit, that it has demonstrated that it's backup functionality (provided either through a facility or contracted services staffed by applicable certified operators when control has been transferred to the backup functionality location) in accordance with Requirement R4 includes monitoring, control, logging, and

alarming sufficient for maintaining compliance with all Reliability Standards that are applicable to a Balancing Authority's and Transmission Operator's primary control center functionality in accordance with Measurement M4.

- Each Reliability Coordinator, Balancing Authority, and Transmission Operator, shall retain evidence for the time period since its last compliance audit, that its dated, current, in effect Operating Plan for backup functionality, has been reviewed and approved annually and that it has been updated within sixty calendar days of any changes to any part of the Operating Plan described in Requirement R1 in accordance with Measurement M5.
- Each Reliability Coordinator, Balancing Authority, and Transmission Operator shall retain dated evidence for the current year and for any Operating Plan for backup functionality in effect since its last compliance audit, that its primary and backup functionality do not depend on each other for the control center functionality required to maintain compliance with Reliability Standards in accordance with Measurement M6.
- Each Reliability Coordinator, Balancing Authority, and Transmission Operator shall retain evidence for the current calendar year and the previous calendar years, such as dated records, that it has tested its Operating Plan for backup functionality, in accordance with Measurement M7.
- Each Reliability Coordinator, Balancing Authority, and Transmission Operator that has experienced a loss of their primary or backup functionality and that anticipates that the loss of primary or backup functionality would last for more than six calendar months shall retain evidence for the current in effect document and any such documents in effect since its last compliance audit that a plan has been submitted to its Regional Entity within six calendar months of the date when the functionality is lost showing how it will re-establish primary or backup functionality in accordance with Measurement M8.

1.3. Compliance Monitoring and Enforcement Program

As defined in the NERC Rules of Procedure, "Compliance Monitoring and Enforcement Program" refers to the identification of the processes that will be used to evaluate data or information for the purpose of assessing performance or outcomes with the associated Reliability Standard.

Violation Severity Levels

R #	Violation Severity Levels			
	Lower VSL	Moderate VSL	High VSL	Severe VSL
R1.	The responsible entity had a current Operating Plan for backup functionality, but the plan was missing one of the requirement's six parts (Requirement R1, Parts 1.1 through 1.6).	The responsible entity had a current Operating Plan for backup functionality, but the plan was missing two of the requirement's six parts (Requirement R1, Parts 1.1 through 1.6).	The responsible entity had a current Operating Plan for backup functionality, but the plan was missing three of the requirement's six parts (Requirement R1, Parts 1.1 through 1.6).	The responsible entity had a current Operating Plan for backup functionality, but the plan was missing four or more of the requirement's six parts (Requirement R1, Parts 1.1 through 1.6) OR The responsible entity did not have a current Operating Plan for backup functionality.
R2.	N/A	The responsible entity did not have a copy of its current Operating Plan for backup functionality available in at least one of its control locations.	N/A	The responsible entity did not have a copy of its current Operating Plan for backup functionality at any of its locations.
R3.	N/A	N/A	N/A	The Reliability Coordinator does not have a backup control center facility (provided through its own dedicated backup facility or at another entity's control

R #	Violation Severity Levels			
	Lower VSL	Moderate VSL	High VSL	Severe VSL
				center staffed with certified Reliability Coordinator operators when control has been transferred to the backup facility) that provides the functionality required for maintaining compliance with all Reliability Standards that are applicable to the primary control center functionality.
R4.	N/A	N/A	N/A	The responsible entity does not have backup functionality (provided either through a facility or contracted services staffed by applicable certified operators when control has been transferred to the backup functionality location) that includes monitoring, control, logging, and alarming sufficient for maintaining compliance with all Reliability Standards that are applicable to a Balancing Authority's and Transmission Operator's

R #	Violation Severity Levels			
	Lower VSL	Moderate VSL	High VSL	Severe VSL
				primary control center functionality.
R5.	The responsible entity did not update and approve its Operating Plan for backup functionality for more than 60 calendar days and less than or equal to 70 calendar days after a change to any part of the Operating Plan described in Requirement R1.	The responsible entity did not update and approve its Operating Plan for backup functionality for more than 70 calendar days and less than or equal to 80 calendar days after a change to any part of the Operating Plan described in Requirement R1.	The responsible entity did not update and approve its Operating Plan for backup functionality for more than 80 calendar days and less than or equal to 90 calendar days after a change to any part of the Operating Plan described in Requirement R1.	The responsible entity did not have evidence that its Operating Plan for backup functionality was annually reviewed and approved. OR, The responsible entity did not update and approve its Operating Plan for backup functionality for more than 90 calendar days after a change to any part of the Operating Plan described in Requirement R1.
R6.	N/A	N/A	N/A	The responsible entity has primary and backup functionality that do depend on each other for the control center functionality required to maintain compliance with Reliability Standards.
R7.	The responsible entity conducted an annual test of	The responsible entity conducted an annual test of	The responsible entity conducted an annual test of	The responsible entity did not conduct an annual test

R #	Violation Severity Levels			
	Lower VSL	Moderate VSL	High VSL	Severe VSL
	its Operating Plan for backup functionality, but it did not document the results. OR, The responsible entity conducted an annual test of its Operating Plan for backup functionality, but the test was for less than two continuous hours but more than or equal to 1.5 continuous hours.	its Operating Plan for backup functionality, but the test was for less than 1.5 continuous hours but more than or equal to 1 continuous hour.	its Operating Plan for backup functionality, but the test did not assess the transition time between the simulated loss of its primary control center and the time to fully implement the backup functionality OR, The responsible entity conducted an annual test of its Operating Plan for backup functionality, but the test was for less than 1 continuous hour but more than or equal to 0.5 continuous hours.	of its Operating Plan for backup functionality. OR, The responsible entity conducted an annual test of its Operating Plan for backup functionality, but the test was for less than 0.5 continuous hours.
R8.	The responsible entity experienced a loss of its primary or backup functionality and anticipated that the loss of primary or backup functionality would last for more than six calendar months and provided a plan to its	The responsible entity experienced a loss of its primary or backup functionality and anticipated that the loss of primary or backup functionality would last for more than six calendar months provided a plan to its Regional Entity	The responsible entity experienced a loss of its primary or backup functionality and anticipated that the loss of primary or backup functionality would last for more than six calendar months provided a plan to its Regional Entity	The responsible entity experienced a loss of its primary or backup functionality and anticipated that the loss of primary or backup functionality would last for more than six calendar months, but did not submit a plan to its Regional

R #	Violation Severity Levels			
	Lower VSL	Moderate VSL	High VSL	Severe VSL
	Regional Entity showing how it will re-establish primary or backup functionality but the plan was submitted more than six calendar months but less than or equal to seven calendar months after the date when the functionality was lost.	showing how it will re-establish primary or backup functionality but the plan was submitted in more than seven calendar months but less than or equal to eight calendar months after the date when the functionality was lost.	showing how it will re-establish primary or backup functionality but the plan was submitted in more than eight calendar months but less than or equal to nine calendar months after the date when the functionality was lost.	Entity showing how it will re-establish primary or backup functionality for more than nine calendar months after the date when the functionality was lost.

D. Regional Variances

None.

E. Associated Documents

Link to the Implementation Plan and other important associated documents.

Version History

Version	Date	Action	Change Tracking
1	2009 - 2010	Project 2006-04: Revisions	Major re-write to accommodate changes noted in project file
1	August 5, 2010	Project 2006-04: Adopted by the Board	
1	April 21, 2011	Project 2006-04: FERC Order issued approving EOP-008-1 (approval effective June 27, 2011)	
1	July 1, 2013	Project 2006-04: Updated VRFs and VSLs based on June 24, 2013 approval	
2	July 9, 2017	Adopted by the NERC Board of Trustees	Revised
2	January 18, 2018	FERC order issued approving EOP-008-2. Docket No. RM17-12-000.	

Rationale

Rationale for Requirement R1: The phrase "data exchange capabilities" is replacing “data communications in Requirement R1, Part 1.2.2 for the following reasons:

COM-001-1 (no longer enforceable) covered telecommunications, which could be viewed as covering both voice and data. COM-001-2.1 (currently enforceable) focuses on "Interpersonal Communication" and does not address data.

The topic of data exchange has historically been covered in the IRO / TOP Standards. Most recently the revisions to the standards that came out of Project 2014-03 Revisions to TOP and IRO Standards use the phrase "data exchange capabilities." The rationale included in the IRO-002-4 standard discusses the need to retain the topic of data exchange, as it is not addressed in the COM standards.

A. Introduction

1. **Title:** Transmission Maintenance
2. **Number:** FAC-501-WECC-2
3. **Purpose:** To ensure the Transmission Owner of a transmission path identified in Attachment B, Major WECC Transfer Paths in the Bulk Electric System, including associated facilities has a Transmission Maintenance and Inspection Plan (TMIP); and performs and documents maintenance and inspection activities in accordance with the TMIP.
4. **Applicability**

   4.1 Transmission Owners that maintain the transmission paths in Attachment B.
5. **Effective Date*:** The first day of the first quarter following applicable regulatory approval.

B. Requirements and Measures

R1. Each Transmission Owner shall have a TMIP that includes, at a minimum, each of the items listed in Attachment A, Transmission Maintenance and Inspection Plan Content. *[Violation Risk Factor: Medium] [Time Horizon: Long-term Planning]*

M1. Each Transmission Owner will have evidence that it has a TMIP detailing each of the items listed in Attachment A, as required in Requirement R1.

R2. Each Transmission Owner shall annually update its TMIP to reflect all changes to its TMIP. *[Violation Risk Factor: Medium] [Time Horizon: Long-term Planning]*

M2. Each Transmission Owner will have evidence that it annually updated its TMIP, as required in Requirement R2. When an annual update shows that no changes are required to the TMIP, evidence may include but is not limited to, attestation that the update was performed but showed that no changes were required.

R3. Each Transmission Owner shall adhere to its TMIP. *[Violation Risk Factor: Medium] [Time Horizon: Operations Assessment]*

M3. Each Transmission Owner will have evidence that it adhered to its TMIP, as required in Requirement R3. Evidence may include, but is not limited to:

1.1 The date(s) the patrol, inspection or maintenance was performed;

1.2 The transmission Facility or Element on which the maintenance was performed;

1.3 A description of the inspection results or maintenance performed.

C. Compliance

1. Compliance Monitoring Process

1.1. Compliance Enforcement Authority:
The British Columbia Utilities Commission.

1.2. Evidence Retention: The following evidence retention period(s) identify the period of time an entity is required to retain specific evidence to demonstrate compliance. For instances where the evidence retention period specified below is shorter than the time since the last audit, the Compliance Enforcement Authority may ask an entity to provide other evidence to show that it was compliant for the full-time period since the last audit.

The applicable entity shall keep data or evidence to show compliance as identified below unless directed by its Compliance Enforcement Authority to retain specific evidence for a longer period of time as part of an investigation.

- The Transmission Owners listed in section 4.1 shall keep data or evidence of Requirements 1-3 for three calendar years, or since the last audit, whichever is longer.

1.3. Compliance Monitoring and Enforcement Program: As defined in the NERC Rules of Procedure, "Compliance Monitoring and Enforcement Program" refers to the identification of the processes that will be used to evaluate data or information for the purpose of assessing performance or outcomes with the associated Reliability Standard.

Violation Severity Levels

R #	Violation Severity Levels			
	Lower VSL	Moderate VSL	High VSL	Severe VSL
R1.	The Transmission Owner's TMIP did not include one of the items listed in Attachment A, as required in Requirement R1.	The Transmission Owner's TMIP did not include two of the items listed in Attachment A, as required in Requirement R1.	The Transmission Owner's TMIP did not include three of the items listed in Attachment A, as required in Requirement R1.	The Transmission Owner's TMIP did not include four or more of the items listed in Attachment A, as required in Requirement R1.
R2.	The Transmission Owner did not annually update its TMIP (within the 365 days following the last review), as required by R2.	The Transmission Owner did not update its TMIP within the last one year and 1 day (within the 366 days following the last review), as required by R2.	The Transmission Owner did not update its TMIP within the last two years and 1 day (within the 731 days following the last review), as required by R2.	The Transmission Owner did not update its TMIP within the last three years and 1 day (within the 1095 days following the last review), as required by R2.
R3.	The Transmission Owner failed to adhere to: 1) one transmission line maintenance item, or 2) one station maintenance item, as contained in its TMIP, as required in R3.	The Transmission Owner failed to adhere to: 1) two transmission line maintenance items; or, 2) two station maintenance items; or 3) any combination of two items taken from the above list, for items contained in its TMIP, as required in R3.	The Transmission Owner failed to adhere to: 1) three transmission line maintenance items; or, 2) three station maintenance items; or 3) any combination of three items taken from the above list, for items contained in its TMIP, as required in R3.	The Transmission Owner failed to adhere to: 1) four or more transmission line maintenance items; or, 2) four or more station maintenance items; or, 3) any combination of four or more items taken from the above list, for items contained in its TMIP, as required in R3.

D. Regional Variances

None.

E. Associated Documents

None

Version History – Shows Approval History and Summary of Changes in the Action Field

Version	Date	Action	Change Tracking
1	April 16, 2008	Permanent Replacement Standard for PRC-STD-005-1	
1	October 29, 2008	NERC BOT conditional approval	
1	April 21, 2011	FERC Approved in Order 751	
2	July 1, 2017	Approved by the WECC Board of Directors.	1) Conformed to newest NERC template and drafting conventions, 2) eliminated URLs, 3) clarified Attachment A, and Measure M3.
2	February 8, 2018	Adopted by the NERC Board of Trustees.	
2	May 30, 2018	FERC Order issued approving FAC-501-WECC-2. Docket No. RD18-5-000	

Attachment A
Transmission Maintenance and Inspection Plan Content

The TMIP shall include, at a minimum, each of the following details:

1. Facilities

A list of Facilities (e.g., transmission lines, transformers, etc.) and Elements (e.g. circuit breaker, bus section, etc.) that comprise each transmission path(s) identified in Attachment B, Major WECC Transfer Paths in the Bulk Electric System.

2. Maintenance Methodology

A description of the maintenance methodology used for the Facility, transmission line, or station included in the TMIP.

The TMIP maintenance methodology may be any one of the following or any combination thereof, but must include at least one of the following:

- Performance-based
- Time-based
- Condition based

3. Periodicity

A specification of the periodicity that the described maintenance will occur, or under what circumstances it occurs.

4. Transmission Line Maintenance

A description of each of the following for the transmission line(s) included in the TMIP:

a. Inspection requirements

b. Patrol requirements

c. Tower and wood pole structure management

5. Station Maintenance

A description of each of the following for each station included in the TMIP:

a. Inspection requirements

b. Equipment maintenance for each of the following:

1. Circuit breakers

2. Power transformers (including, but not limited to, phase-shifting transformers)

3. Reactive devices (including, but not limited to, shunt capacitors, series capacitors, synchronous condensers, shunt reactors, and tertiary reactors)

Attachment B

Major WECC Transfer Paths in the Bulk Electric System

	PATH NAME*	Path Number
1.	Alberta – British Columbia	1
2.	Northwest – British Columbia	3
3.	West of Cascades – North	4
4.	West of Cascades – South	5
5.	West of Hatwai	6
6.	Montana to Northwest	8
7.	Idaho to Northwest	14
8.	South of Los Banos or Midway- Los Banos	15
9.	Idaho – Sierra	16
10.	Borah West	17
11.	Idaho – Montana	18
12.	Bridger West	19
13.	Path C	20
14.	Southwest of Four Corners	22
15.	PG&E – SPP	24
16.	Northern – Southern California	26
17.	Intmntn. Power Project DC Line	27
18.	TOT 1A	30
19.	TOT 2A	31
20.	Pavant – Gonder 230 kV Intermountain – Gonder 230 kV	32
21.	TOT 2B	34
22.	TOT 2C	35
23.	TOT 3	36
24.	TOT 5	39
25.	SDGE – CFE	45
26.	West of Colorado River (WOR)	46
27.	Southern New Mexico (NM1)	47
28.	Northern New Mexico (NM2)	48
29.	East of the Colorado River (EOR)	49
30.	Cholla – Pinnacle Peak	50
31.	Southern Navajo	51
32.	Brownlee East	55
33.	Lugo – Victorville 500 kV	61
34.	Pacific DC Intertie	65
35.	COI	66
36.	North of John Day cutplane	73
37.	Alturas	76
38.	Montana Southeast	80
39.	SCIT**	
40.	COI/PDCI – North of John Day cutplane**	

* For an explanation of terms, path numbers, and definition for the paths refer to WECC's Path Rating Catalog.

** The SCIT and COI/PDCI-North of John Day Cutplane are paths that are operated in accordance with nomograms identified in WECC's Path Rating Catalog.

THIS SECTION WILL NOT BE PART OF THE STANDARD BUT IS REQUIRED FOR NERC FILING.

Standards Authorization Request (SAR)

WECC-0120 FAC-501-WECC-2 Transmission Maintenance SAR

Approvals Required

- WECC Ballot Pool Pending
- WECC Board of Directors Pending
- NERC Board of Trustees Pending
- FERC Pending

Applicable Entities

Transmission Owners that maintain the transmission paths in the most current WECC Major Paths table (Attachment B of the standard)

Conforming Changes to Other Standards

None are required.

Proposed Effective Date

The first day of the first quarter following regulatory approval

Justification

The WECC-0120, FAC-501-WECC-2, Transmission Maintenance Drafting Team (DT) has reviewed NERC Standards, both in effect and those standards that are NERC Board of Trustees approved pending regulatory filing. The DT concluded that the proposed substantive changes pose a minimal burden beyond ordinary and current operations. As such, the short implementation time should impose no undue burden.

Consideration of Early Compliance

The DT foresees no negative impacts to reliability in the event of early compliance.

Retirements

None

A. Introduction

1. **Title:** **Operating Personnel Credentials**
2. **Number:** **PER-003-2**
3. **Purpose:** To ensure that System Operators performing the reliability-related tasks of the Reliability Coordinator, Balancing Authority and Transmission Operator are certified through the NERC System Operator Certification Program when filling a Real-time operating position responsible for control of the Bulk Electric System.
4. **Applicability:**

   4.1. Functional Entities:

   4.1.1. Reliability Coordinator

   4.1.2. Transmission Operator

   4.1.3. Balancing Authority
5. **Effective Date*:** See Implementation Plan for standard PER-003-2.

B. Requirements and Measures

R1. Each Reliability Coordinator shall staff its Real-time operating positions performing Reliability Coordinator reliability-related tasks with System Operators who have demonstrated minimum competency in the areas listed by obtaining and maintaining a valid NERC Reliability Operator certificate [(1)(2)]: *[Risk Factor: High][Time Horizon: Real-time Operations]*

1.1. Areas of Competency

1.1.1. Resource and demand balancing

1.1.2. Transmission operations

1.1.3. Emergency preparedness and operations

1.1.4. System operations

1.1.5. Protection and control

1.1.6. Voltage and reactive

1.1.7. Interchange scheduling and coordination

1.1.8. Interconnection reliability operations and coordination

---

[1] Non-NERC certified personnel performing any reliability-related task of a real-time operating position must be under the direct supervision of a NERC Certified System Operator stationed at that operating position; the NERC Certified System Operator at that operating position has ultimate responsibility for the performance of the reliability-related tasks.

[2] The NERC certificates referenced in this standard pertain to those certificates identified in the NERC System Operator Certification Program Manual.

M1. Each Reliability Coordinator shall have the following evidence to show that it staffed its Real-time operating positions performing reliability-related tasks with System Operators who have demonstrated the applicable minimum competency by obtaining and maintaining the appropriate, valid NERC certificate:

M1.1 A list of Real-time operating positions.

M1.2 A list of System Operators assigned to its Real-time operating positions.

M1.3 A copy of each of its System Operator's NERC certificate or NERC certificate number with expiration date which demonstrates compliance with the applicable Areas of Competency.

M1.4 Work schedules, work logs, or other equivalent evidence showing which System Operators were assigned to work in Real-time operating positions.

R2. Each Transmission Operator shall staff its Real-time operating positions performing Transmission Operator reliability-related tasks with System Operators who have demonstrated minimum competency in the areas listed by obtaining and maintaining one of the following valid NERC certificates [(1)(2)]: *[Risk Factor: High][Time Horizon: Real-time Operations]*:

2.1. Areas of Competency

2.1.1. Transmission operations

2.1.2. Emergency preparedness and operations

2.1.3. System operations

2.1.4. Protection and control

2.1.5. Voltage and reactive

2.2. Certificates

- Reliability Operator
- Balancing, Interchange and Transmission Operator
- Transmission Operator

M2. Each Transmission Operator shall have the following evidence to show that it staffed its Real-time operating positions performing reliability-related tasks with System Operators who have demonstrated the applicable minimum competency by obtaining and maintaining the appropriate, valid NERC certificate:

---

[1] Non-NERC certified personnel performing any reliability-related task of a real-time operating position must be under the direct supervision of a NERC Certified System Operator stationed at that operating position; the NERC Certified System Operator at that operating position has ultimate responsibility for the performance of the reliability-related tasks.

[2] The NERC certificates referenced in this standard pertain to those certificates identified in the NERC System Operator Certification Program Manual.

M2.1 A list of Real-time operating positions.

M2.2 A list of System Operators assigned to its Real-time operating positions.

M2.3 A copy of each of its System Operator's NERC certificate or NERC certificate number with expiration date which demonstrates compliance with the applicable Areas of Competency.

M2.4 Work schedules, work logs, or other equivalent evidence showing which System Operators were assigned to work in Real-time operating positions.

R3. Each Balancing Authority shall staff its Real-time operating positions performing Balancing Authority reliability-related tasks with System Operators who have demonstrated minimum competency in the areas listed by obtaining and maintaining one of the following valid NERC certificates [(1)(2)]: *[Risk Factor: High][Time Horizon: Real-time Operations]*:

3.1. Areas of Competency

3.1.1. Resources and demand balancing

3.1.2. Emergency preparedness and operations

3.1.3. System operations

3.1.4. Interchange scheduling and coordination

3.2. Certificates

- Reliability Operator
- Balancing, Interchange and Transmission Operator
- Balancing and Interchange Operator

M3. Each Balancing Authority shall have the following evidence to show that it staffed its Real-time operating positions performing reliability-related tasks with System Operators who have demonstrated the applicable minimum competency by obtaining and maintaining the appropriate, valid NERC certificate:

M3.1 A list of Real-time operating positions.

M3.2 A list of System Operators assigned to its Real-time operating positions.

M3.3 A copy of each of its System Operator's NERC certificate or NERC certificate number with expiration date which demonstrates compliance with the applicable Areas of Competency.

---

[1] Non-NERC certified personnel performing any reliability-related task of a real-time operating position must be under the direct supervision of a NERC Certified System Operator stationed at that operating position; the NERC Certified System Operator at that operating position has ultimate responsibility for the performance of the reliability-related tasks.

[2] The NERC certificates referenced in this standard pertain to those certificates identified in the NERC System Operator Certification Program Manual.

M3.4 Work schedules, work logs, or other equivalent evidence showing which System Operators were assigned to work in Real-time operating positions.

C. Compliance

1. Compliance Monitoring Process

1.1. Compliance Enforcement Authority:
The British Columbia Utilities Commission.

1.2. Evidence Retention:
The following evidence retention period(s) identify the period of time an entity is required to retain specific evidence to demonstrate compliance. For instances where the evidence retention period specified below is shorter than the time since the last audit, the Compliance Enforcement Authority may ask an entity to provide other evidence to show that it was compliant for the full-time period since the last audit.

The applicable entity shall keep data or evidence to show compliance as identified below unless directed by its Compliance Enforcement Authority to retain specific evidence for a longer period of time as part of an investigation.

- Each Reliability Coordinator, Transmission Operator and Balancing Authority shall keep data or evidence for three years or since its last compliance audit, whichever time frame is the greatest.

1.3. Compliance Monitoring and Enforcement Program
As defined in the NERC Rules of Procedure, “Compliance Monitoring and Enforcement Program” refers to the identification of the processes that will be used to evaluate data or information for the purpose of assessing performance or outcomes with the associated Reliability Standard.

Violation Severity Levels

R #	Violation Severity Levels			
	Lower VSL	Moderate VSL	High VSL	Severe VSL
R1.	N/A	N/A	N/A	The Reliability Coordinator failed to staff each Real-time operating position performing Reliability Coordinator reliability-related tasks with a System Operator having a valid NERC certificate as defined in Requirement R1.
R2.	N/A	N/A	N/A	The Transmission Operator failed to staff each Real-time operating position performing Transmission Operator reliability-related tasks with a System Operator having a valid NERC certificate as defined in Requirement R2, Part 2.2.
R3.	N/A	N/A	N/A	The Balancing Authority failed to staff each Real-time operating position performing Balancing Authority reliability-related tasks with a System Operator having a valid NERC certificate as defined in Requirement R3, Part 3.2.

D. Regional Variances

None.

E. Associated Documents

Implementation Plan

Version History

Version	Date	Action	Change Tracking
0	April 1, 2005	Effective Date	New
1	February 17, 2011	Complete revision under Project 2007-04	Revision
1	February 17, 2011	Adopted by Board of Trustees	
1	September 15, 2011	FERC Order issued by FERC approving PER-003-1 (effective date of the Order is September 15, 2011)	
2	May 10, 2018	Added footnote to requirements	Revision
2	May 10, 2018	Adopted by Board of Trustees	Revision
2	November 21, 2018	FERC Letter Order approving PER-003-2. Docket No. RD18-9-000	

A. Introduction

1. **Title:** **Specific Training for Personnel**
2. **Number:** **PER-006-1**
3. **Purpose:** To ensure that personnel are trained on specific topics essential to reliability to perform or support Real-time operations of the Bulk Electric System.
4. **Applicability:**
   - **4.1. Functional Entities:**
     - **4.1.1.** Generator Operator that has:
       - **4.1.1.1.** Plant personnel who are responsible for the Real-time control of a generator and receive Operating Instruction(s) from the Generator Operator's Reliability Coordinator, Balancing Authority, Transmission Operator, or centrally located dispatch center.
5. **Effective Date*:** See Implementation Plan for Project 2007-06.2.

B. Requirements and Measures

R1. Each Generator Operator shall provide training to personnel identified in Applicability section 4.1.1.1. on the operational functionality of Protection Systems and Remedial Action Schemes (RAS) that affect the output of the generating Facility(ies) it operates. *[Violation Risk Factor: Medium] [Time Horizon: Long-term Planning]*

M1. Each Generator Operator shall have available for inspection, evidence that the applicable personnel completed training. This evidence may be documents such as training records showing successful completion of training that includes training materials, the name of the person, and date of training.

C. Compliance

1. **Compliance Monitoring Process**
   - **1.1. Compliance Enforcement Authority:**
     The British Columbia Utilities Commission
   - **1.2. Evidence Retention:**
     The following evidence retention period(s) identify the period of time an entity is required to retain specific evidence to demonstrate compliance. For instances where the evidence retention period specified below is shorter than the time since the last audit, the Compliance Enforcement Authority may ask an entity to provide other evidence to show that it was compliant for the full-time period since the last audit.

The applicable entity shall keep data or evidence to show compliance as identified below unless directed by its Compliance Enforcement Authority to retain specific evidence for a longer period of time as part of an investigation.

- The Generator Operator shall keep data or evidence of Requirement R1 for the current year and three previous calendar years.

1.3. Compliance Monitoring and Enforcement Program

As defined in the NERC Rules of Procedure, "Compliance Monitoring and Enforcement Program" refers to the identification of the processes that will be used to evaluate data or information for the purpose of assessing performance or outcomes with the associated Reliability Standard.

Violation Severity Levels

R #	Violation Severity Levels			
	Lower VSL	Moderate VSL	High VSL	Severe VSL
R1.	The Generator Operator failed to provide training as described in Requirement R1 to the greater of: • one applicable personnel at a single Facility, or • 5% or less of the total applicable personnel of the Generator Operator.	The Generator Operator failed to provide training as described in Requirement R1 to the greater of: • two applicable personnel at a single Facility, or • more than 5% and less than or equal to 10% of the total applicable personnel of the Generator Operator.	The Generator Operator failed to provide training as described in Requirement R1 to the greater of: • three applicable personnel at a single Facility, or • more than 10% and less than or equal to 15% of the total applicable personnel of the Generator Operator.	The Generator Operator failed to provide training as described in Requirement R1 to the greater of: • five or more applicable personnel at a single Facility, or • more than 15% of the total applicable personnel of the Generator Operator. **OR** The Generator Operator failed to provide training as described in Requirement R1 to its applicable personnel.

D. Regional Variances

None.

E. Associated Documents

Project 2007-06.2 Implementation Plan[1]

[1] http://www.nerc.com/pa/Stand/Project200706_2SystemProtectionCoordinationDL/Project_2007_06_2_Imp_Plan_Draft_1_2016_03_10_Clean.pdf

Version History

Version	Date	Action	Change Tracking
1	August 11, 2016	Adopted by the NERC Board of Trustees	New standard developed under Project 2007-06.2
1	June 7, 2018	FERC Order issued approving PER-006-1. Docket No. RM16-22-000.	

Guidelines and Technical Basis

Requirement R1

The Generator Operator (GOP) monitors and controls its generating Facilities in Real-time to maintain reliability. To accomplish this, applicable plant personnel responsible for Real-time control of a generating Facility must be trained on how the operational functionality of Protection Systems and Remedial Action Schemes (RAS) are applied and the affects they may have on a generating Facility. Although, training does not have to be Facility-specific, the standard applies to plant operating personnel associated with the specific Facility to which they have Real-time control. This does not include plant personnel not responsible for Real-time control (e.g., fuel or coal handlers, electricians, machinists, or maintenance staff).

A periodicity for training is not specified in Requirement R1 because the GOP must ensure its plant personnel who have Real-time control of a generator are trained. The Generator Operator must also ensure it provides applicable training that results from changes to the operational functionality of the Protection Systems and Remedial Action Schemes that affect the output of the generation Facility(ies).

The phrase “operational functionality” focuses the training on how Protection Systems operate and prevent possible damage to Elements. It also addresses how RAS detects pre-determined BES conditions and automatically takes corrective actions.

Considerations for operational functionality may include, but are not limited to the following:

- Purpose of protective relays and RAS
- Zones of protection
- Protection communication systems (e.g., line current differential, direct transfer trip, etc.)
- Voltage and current inputs
- Station dc supply associated with protective functions
- Resulting actions – tripping/closing of breakers; tripping of a generator step-up (GSU) transformer; or generator ramping/tripping control functions

Requirement R1 focuses on the operational functionality of Protection Systems and Remedial Action Schemes specific to the generating plant and not the Bulk Electric System.

This requirement focuses on those systems that are related to the electrical output of the generator. Protective systems which trip breakers serving station auxiliary loads (e.g., such as pumps, fans, or fuel handling equipment) are not included in the scope of this training. Furthermore, protection of secondary unit substation (SUS) or low voltage switchgear transformers and relays protecting other downstream plant electrical distribution system

components are not in the scope of this training, even if a trip of these devices might eventually result in a trip of the generating unit.

Rationale

Rationale for Requirement R1: Protection Systems and Remedial Action Schemes (RAS) are an integral part of reliable Bulk Electric System (BES) operation. This requirement addresses the reliability objective of ensuring that Generator Operator (GOP) plant operating personnel understand the operational functionality of Protection Systems and RAS and their effects on generating Facilities.

A. Introduction

1. **Title:** **Generator Relay Loadability**

2. **Number:** **PRC-025-2**

3. **Purpose:** To set load-responsive protective relays associated with generation Facilities at a level to prevent unnecessary tripping of generators during a system disturbance for conditions that do not pose a risk of damage to the associated equipment.

4. **Applicability:**

   4.1. Functional Entities:

   4.1.1. Generator Owner that applies load-responsive protective relays[1] at the terminals of the Elements listed in 4.2, Facilities.

   4.1.2. Transmission Owner that applies load-responsive protective relays[1] at the terminals of the Elements listed in 4.2, Facilities.

   4.1.3. Distribution Provider that applies load-responsive protective relays[1] at the terminals of the Elements listed in 4.2, Facilities.

   4.2. Facilities: The following Elements associated with Bulk Electric System (BES) generating units and generating plants, including those generating units and generating plants identified as Blackstart Resources in the Transmission Operator's system restoration plan:

   4.2.1. Generating unit(s).

   4.2.2. Generator step-up (i.e., GSU) transformer(s).

   4.2.3. Unit auxiliary transformer(s) (UAT) that supply overall auxiliary power necessary to keep generating unit(s) online.[2]

   4.2.4. Elements that connect the GSU transformer(s) to the Transmission system that are used exclusively to export energy directly from a BES generating unit or generating plant, except that Elements may also supply generating plant loads.

   4.2.5. Elements utilized in the aggregation of dispersed power producing resources.

5. **Effective Date*:** See Implementation Plan

[1] Relays include low voltage protection devices that have adjustable settings.

[2] These transformers are variably referred to as station power, unit auxiliary transformer(s) (UAT), or station service transformer(s) used to provide overall auxiliary power to the generator station when the generator is running. Loss of these transformers will result in removing the generator from service. Refer to the PRC-025-2 Guidelines and Technical Basis for more detailed information concerning unit auxiliary transformers.

6. **Background:** After analysis of many of the major disturbances in the last 25 years on the North American interconnected power system, generators have been found to have tripped for conditions that did not apparently pose a direct risk to those generators and associated equipment within the time period where the tripping occurred. This tripping has often been determined to have expanded the scope and/or extended the duration of that disturbance. This was noted to be a serious issue in the August 2003 "blackout" in the northeastern North American continent.[3]

   During the recoverable phase of a disturbance, the disturbance may exhibit a "voltage disturbance" behavior pattern, where system voltage may be widely depressed and may fluctuate. In order to support the system during this transient phase of a disturbance, this standard establishes criteria for setting load-responsive protective relays such that individual generators may provide Reactive Power within their dynamic capability during transient time periods to help the system recover from the voltage disturbance. The premature or unnecessary tripping of generators resulting in the removal of dynamic Reactive Power exacerbates the severity of the voltage disturbance, and as a result changes the character of the system disturbance. In addition, the loss of Real Power could initiate or exacerbate a frequency disturbance.

7. **Standard Only Definition:** None.

B. Requirements and Measures

R1. Each Generator Owner, Transmission Owner, and Distribution Provider shall apply settings that are in accordance with PRC-025-2 – Attachment 1: Relay Settings, on each load-responsive protective relay while maintaining reliable fault protection. *[Violation Risk Factor: High] [Time Horizon: Long-Term Planning]*

M1. For each load-responsive protective relay, each Generator Owner, Transmission Owner, and Distribution Provider shall have evidence (e.g., summaries of calculations, spreadsheets, simulation reports, or setting sheets) that settings were applied in accordance with PRC-025-2 – Attachment 1: Relay Settings.

C. Compliance

1. **Compliance Monitoring Process**

   1.1. Compliance Enforcement Authority:

   The British Columbia Utilities Commission.

   1.2. Evidence Retention: The following evidence retention period(s) identify the period of time an entity is required to retain specific evidence to

[3] Interim Report: Causes of the August 14th Blackout in the United States and Canada, U.S.-Canada Power System Outage Task Force, November 2003 (http://www.nerc.com/docs/docs/blackout/814BlackoutReport.pdf).

demonstrate compliance. For instances where the evidence retention period specified below is shorter than the time since the last audit, the Compliance Enforcement Authority may ask an entity to provide other evidence to show that it was compliant for the full time period since the last audit.

The applicable entity shall keep data or evidence to show compliance as identified below unless directed by its Compliance Enforcement Authority to retain specific evidence for a longer period of time as part of an investigation:

- The Generator Owner, Transmission Owner, and Distribution Provider shall retain evidence of Requirement R1 and Measure M1 for the most recent three calendar years.
- If a Generator Owner, Transmission Owner, or Distribution Provider is found non-compliant, it shall keep information related to the non-compliance until mitigation is complete and approved or for the time specified above, whichever is longer.

Violation Severity Levels

R #	Violation Severity Levels			
	Lower VSL	Moderate VSL	High VSL	Severe VSL
R1	N/A	N/A	N/A	The Generator Owner, Transmission Owner, and Distribution Provider did not apply settings in accordance with *PRC-025-2 – Attachment 1: Relay Settings*, on an applied load-responsive protective relay.

D. Regional Variances

None.

E. Associated Documents

NERC System Protection and Control Subcommittee, "Considerations for Power Plant and Transmission System Protection Coordination," technical reference document, Revision 2. (Date of Publication: July 2015)

NERC System Protection and Control Subcommittee, "Unit Auxiliary Transformer Overcurrent Relay Loadability During a Transmission Depressed Voltage Condition." (Date of Publication: March 2016)

IEEE C37.102-2006, "IEEE Guide for AC Generator Protection." (Date of Publication: 2006)

IEEE C37.17-2012, "IEEE Standard for Trip Systems for Low-Voltage (1000 V and below) AC and General Purpose (1500 V and below) DC Power Circuit Breakers." (Date of Publication: September 18, 2012)

IEEE C37.2-2008, "IEEE Standard for Electrical Power System Device Function Numbers, Acronyms, and Contact Designations." (Date of Publication: October 3, 2008)

Version History

Version	Date	Action	Change Tracking
1	August 15, 2013	Adopted by NERC Board of Trustees	New
1	July 17, 2014	FERC order issued approving PRC-025-1	
2	April 19, 2017	SAR accepted by Standards Committee	Project 2016-04
2	February 8, 2018	Adopted by NERC Board of Trustees	Revision
2	May 2, 2018	FERC Order issued approving PRC-025-2. Docket No. RD18-4-000	

PRC-025-2 – Attachment 1: Relay Settings

Introduction

This standard does not require the Generator Owner, Transmission Owner, or Distribution Provider to use any of the protective functions listed in Table 1. Each Generator Owner, Transmission Owner, and Distribution Provider that applies load-responsive protective relays on their respective Elements listed in 4.2, Facilities, shall use one of the following Options in Table 1, Relay Loadability Evaluation Criteria ("Table 1"), to set each load-responsive protective relay element according to its application and relay type. The bus voltage is based on the criteria for the various applications listed in Table 1.

Generators

Synchronous generator relay setting criteria values are derived from the unit's maximum gross Real Power capability, in megawatts (MW), as reported to the Transmission Planner, and the unit's Reactive Power capability, in megavoltampere-reactive (Mvar), is determined by calculating the MW value based on the unit's nameplate megavoltampere (MVA) rating at rated power factor. If different seasonal capabilities are reported, the maximum capability shall be used for the purposes of this standard as a minimum requirement. The Generator Owner may base settings on a capability that is higher than what is reported to the Transmission Planner.

Asynchronous generator relay setting criteria values (including inverter-based installations) are derived from the site's aggregate maximum complex power capability, in MVA, as reported to the Transmission Planner, including the Mvar output of any static or dynamic reactive power devices. If different seasonal capabilities are reported, the maximum capability shall be used for the purposes of this standard as a minimum requirement. The Generator Owner may base settings on a capability that is higher than what is reported to the Transmission Planner.

For applications where synchronous and asynchronous generator types are combined on a generator step-up transformer or on Elements that connect the generator step-up (GSU) transformer(s) to the Transmission system that are used exclusively to export energy directly from a BES generating unit or generating plant (except that Elements may also supply generating plant loads), the setting criteria shall be determined by vector summing the setting criteria of each generator type, and using the bus voltage for the given synchronous generator application and relay type.

Transformers

Calculations using the GSU transformer turns ratio shall use the actual tap that is applied (i.e., in service) for GSU transformers with de-energized tap changers (DETC). If load tap changers (LTC) are used, the calculations shall reflect the tap that results in the lowest generator bus voltage. When the criterion specifies the use of the GSU transformer's impedance, the nameplate impedance at the nominal GSU transformer turns ratio shall be used.

Applications that use more complex topology, such as generators connected to a multiple winding transformer, are not directly addressed by the criteria in Table 1. These topologies can

result in complex power flows, and may require simulation to avoid overly conservative assumptions to simplify the calculations. Entities with these topologies should set their relays in such a way that they do not operate for the conditions being addressed in this standard.

Multiple Lines

Applications that use more complex topology, such as multiple lines that connect the generator step-up (GSU) transformer(s) to the Transmission system that are used exclusively to export energy directly from a BES generating unit or generating plant (except that Elements may also supply generating plant loads) are not directly addressed by the criteria in Table 1. These topologies can result in complex power flows, and it may require simulation to avoid overly conservative assumptions to simplify the calculations. Entities with these topologies should set their relays in such a way that they do not operate for the conditions being addressed in this standard.

Exclusions

The following protection systems are excluded from the requirements of this standard:

1. Any relay elements that are in service only during start up.
2. Load-responsive protective relay elements that are armed only when the generator is disconnected from the system, (e.g., non-directional overcurrent elements used in conjunction with inadvertent energization schemes, and open breaker flashover schemes).
3. Phase fault detector relay elements employed to supervise other load-responsive phase distance elements (e.g., in order to prevent false operation in the event of a loss of potential) provided the distance element is set in accordance with the criteria outlined in the standard.
4. Protective relay elements that are only enabled when other protection elements fail (e.g., overcurrent elements that are only enabled during loss of potential conditions).
5. Protective relay elements used only for Remedial Action Schemes that are subject to one or more requirements in a NERC or Regional Reliability Standard.
6. Protection systems that detect generator overloads that are designed to coordinate with the generator short time capability by utilizing an extremely inverse characteristic set to operate no faster than 7 seconds at 218% of full load current (e.g., rated armature current), and prevent operation below 115% of full-load current.[4]
7. Protection systems that detect overloads and are designed only to respond in time periods which allow an operator 15 minutes or greater to respond to overload conditions.
8. Low voltage protection devices that do not have adjustable settings.

Table 1

Table 1 below is structured and formatted to aid the reader with identifying an option for a given load-responsive protective relay.

[4] IEEE C37.102-2006, "Guide for AC Generator Protection," Section 4.1.1.2.

The first column identifies the application (e.g., synchronous or asynchronous generators, generator step-up transformers, unit auxiliary transformers, Elements that connect the GSU transformer(s) to the Transmission system that are used exclusively to export energy directly from a BES generating unit or generating plant). Dark blue horizontal bars, excluding the header which repeats at the top of each page, demarcate the various applications.

The second column identifies the load-responsive distance or overcurrent protective relay by IEEE device numbers (e.g., 21, 50, 51, 51V-C, 51V-R, or 67) according to the application in the first column. This also includes manufacture protective device trip unit designations for long-time delay, short-time delay, and instantaneous (e.g., L, S, and I). A light blue horizontal bar between the relay types is the demarcation between relay types for a given application. These light blue bars will contain no text, except when the same application continues on the next page of the table with a different relay type.

The third column uses numeric and alphabetic options (i.e., index numbering) to identify the available options for setting load-responsive protective relays according to the application and applied relay type. Another, shorter, light blue bar contains the word “OR,” and reveals to the reader that the relay for that application has one or more options (i.e., “ways”) to determine the bus voltage and setting criteria in the fourth and fifth column, respectively. The bus voltage column and setting criteria columns provide the criteria for determining an appropriate setting.
The table is further formatted by shading groups of relays associated with asynchronous generator applications. Synchronous generator applications and the unit auxiliary transformer applications are not shaded. Also, intentional buffers were added to the table such that similar options, as possible, would be paired together on a per page basis. Note that some applications may have an additional pairing that might occur on adjacent pages.

Table 1. Relay Loadability Evaluation Criteria

Application	Relay Type	Option	Bus Voltage[5]	Setting Criteria
Synchronous generating unit(s), including Elements utilized in the aggregation of dispersed power producing resources	Phase distance relay (e.g., 21) – directional toward the Transmission system	1a	Generator bus voltage corresponding to 0.95 per unit of the high-side nominal voltage times the turns ratio of the generator step-up transformer	The impedance element shall be set less than the calculated impedance derived from 115% of: (1) Real Power output – 100% of the gross MW capability reported to the Transmission Planner, and (2) Reactive Power output – 150% of the MW value, derived from the generator nameplate MVA rating at rated power factor
		OR		
		1b	Calculated generator bus voltage corresponding to 0.85 per unit nominal voltage on the high-side terminals of the generator step-up transformer (including the transformer turns ratio and impedance)	The impedance element shall be set less than the calculated impedance derived from 115% of: (1) Real Power output – 100% of the gross MW capability reported to the Transmission Planner, and (2) Reactive Power output – 150% of the MW value, derived from the generator nameplate MVA rating at rated power factor
		OR		
		1c	Simulated generator bus voltage coincident with the highest Reactive Power output achieved during field-forcing in response to a 0.85 per unit nominal voltage on the high-side terminals of the generator step-up transformer prior to field-forcing	The impedance element shall be set less than the calculated impedance derived from 115% of: (1) Real Power output – 100% of the gross MW capability reported to the Transmission Planner, and (2) Reactive Power output –100% of the maximum gross Mvar output during field-forcing as determined by simulation
	The same application continues on the next page with a different relay type			

[5] Calculations using the generator step-up (GSU) transformer turns ratio shall use the actual tap that is applied (i.e., in service) for GSU transformers with de-energized tap changers (DETC). If load tap changers (LTC) are used, the calculations shall reflect the tap that results in the lowest generator bus voltage. When the criterion specifies the use of the GSU transformer's impedance, the nameplate impedance at the nominal GSU turns ratio shall be used.

Table 1. Relay Loadability Evaluation Criteria

Application	Relay Type	Option	Bus Voltage[5]	Setting Criteria
Synchronous generating unit(s), including Elements utilized in the aggregation of dispersed power producing resources	Phase overcurrent relay (e.g., 50, 51, or 51V-R – voltage-restrained)	2a	Generator bus voltage corresponding to 0.95 per unit of the high-side nominal voltage times the turns ratio of the generator step-up transformer	The overcurrent element shall be set greater than 115% of the calculated current derived from: (1) Real Power output – 100% of the gross MW capability reported to the Transmission Planner, and (2) Reactive Power output – 150% of the MW value, derived from the generator nameplate MVA rating at rated power factor
		OR		
		2b	Calculated generator bus voltage corresponding to 0.85 per unit nominal voltage on the high-side terminals of the generator step-up transformer (including the transformer turns ratio and impedance)	The overcurrent element shall be set greater than 115% of the calculated current derived from: (1) Real Power output – 100% of the gross MW capability reported to the Transmission Planner, and (2) Reactive Power output – 150% of the MW value, derived from the generator nameplate MVA rating at rated power factor
		OR		
		2c	Simulated generator bus voltage coincident with the highest Reactive Power output achieved during field-forcing in response to a 0.85 per unit nominal voltage on the high-side terminals of the generator step-up transformer prior to field-forcing	The overcurrent element shall be set greater than 115% of the calculated current derived from: (1) Real Power output – 100% of the gross MW capability reported to the Transmission Planner or, and (2) Reactive Power output –100% of the maximum gross Mvar output during field-forcing as determined by simulation
	Phase time overcurrent relay (e.g., 51V-C) – voltage controlled (Enabled to operate as a function of voltage)	3	Generator bus voltage corresponding to 1.0 per unit of the high-side nominal voltage times the turns ratio of the generator step-up transformer	Voltage control setting shall be set less than 75% of the calculated generator bus voltage

A different application starts on the next page

Table 1. Relay Loadability Evaluation Criteria

Application	Relay Type	Option	Bus Voltage[5]	Setting Criteria
Asynchronous generating unit(s) (including inverter-based installations), including Elements utilized in the aggregation of dispersed power producing resources	Phase distance relay (e.g., 21) – directional toward the Transmission system	4	Generator bus voltage corresponding to 1.0 per unit of the high-side nominal voltage times the turns ratio of the generator step-up transformer	The impedance element shall be set less than the calculated impedance derived from 130% of the maximum aggregate nameplate MVA output at rated power factor (including the Mvar output of any static or dynamic reactive power devices)
	Phase overcurrent relay (e.g., 50, 51, or 51V-R – voltage-restrained)	5a	Generator bus voltage corresponding to 1.0 per unit of the high-side nominal voltage times the turns ratio of the generator step-up transformer	The overcurrent element shall be set greater than 130% of the calculated current derived from the maximum aggregate nameplate MVA output at rated power factor (including the Mvar output of any static or dynamic reactive power devices)
		OR		
		5b	Generator bus voltage corresponding to 1.0 per unit of the high-side nominal voltage times the turns ratio of the generator step-up transformer	The lower tolerance of the overcurrent element tripping characteristic shall not infringe upon the resource capability (including the Mvar output of the resource and any static or dynamic reactive power devices) See Figure A.
	Phase time overcurrent relay (e.g., 51V-C) – voltage controlled (Enabled to operate as a function of voltage)	6	Generator bus voltage corresponding to 1.0 per unit of the high-side nominal voltage times the turns ratio of the generator step-up transformer	Voltage control setting shall be set less than 75% of the calculated generator bus voltage

A different application starts on the next page

Table 1. Relay Loadability Evaluation Criteria

Application	Relay Type	Option	Bus Voltage[5]	Setting Criteria
Relays installed on generator-side[6] of the Generator step-up transformer(s) connected to synchronous generators	Phase distance relay (e.g., 21) – directional toward the Transmission system	7a	Generator bus voltage corresponding to 0.95 per unit of the high-side nominal voltage times the turns ratio of the generator step-up transformer	The impedance element shall be set less than the calculated impedance derived from 115% of: (1) Real Power output – 100% of the aggregate generation gross MW reported to the Transmission Planner, and (2) Reactive Power output – 150% of the aggregate generation MW value, derived from the generator nameplate MVA rating at rated power factor
		OR		
		7b	Calculated generator bus voltage corresponding to 0.85 per unit nominal voltage on the high-side terminals of the generator step-up transformer (including the transformer turns ratio and impedance)	The impedance element shall be set less than the calculated impedance derived from 115% of: (1) Real Power output – 100% of the aggregate generation gross MW reported to the Transmission Planner, and (2) Reactive Power output – 150% of the aggregate generation MW value, derived from the generator nameplate MVA rating at rated power factor
		OR		
		7c	Simulated generator bus voltage coincident with the highest Reactive Power output achieved during field-forcing in response to a 0.85 per unit nominal voltage on the high-side terminals of the generator step-up transformer prior to field-forcing	The impedance element shall be set less than the calculated impedance derived from 115% of: (1) Real Power output – 100% of the aggregate generation gross MW reported to the Transmission Planner, and (2) Reactive Power output –100% of the aggregate generation maximum gross Mvar output during field-forcing as determined by simulation
	The same application continues on the next page with a different relay type			

[6] If the relay is installed on the high-side of the GSU transformer, use Option 14.

Table 1. Relay Loadability Evaluation Criteria

Application	Relay Type	Option	Bus Voltage[5]	Setting Criteria
Relays installed on generator-side[7] of the Generator step-up transformer(s) connected to synchronous generators	Phase overcurrent relay (e.g., 50 or 51)	8a	Generator bus voltage corresponding to 0.95 per unit of the high-side nominal voltage times the turns ratio of the generator step-up transformer	The overcurrent element shall be set greater than 115% of the calculated current derived from: (1) Real Power output – 100% of the aggregate generation gross MW reported to the Transmission Planner, and (2) Reactive Power output – 150% of the aggregate generation MW value, derived from the generator nameplate MVA rating at rated power factor
		OR		
		8b	Calculated generator bus voltage corresponding to 0.85 per unit nominal voltage on the high-side terminals of the generator step-up transformer (including the transformer turns ratio and impedance)	The overcurrent element shall be set greater than 115% of the calculated current derived from: (1) Real Power output – 100% of the aggregate generation gross MW reported to the Transmission Planner, and (2) Reactive Power output – 150% of the aggregate generation MW value, derived from the generator nameplate MVA rating at rated power factor
		OR		
		8c	Simulated generator bus voltage coincident with the highest Reactive Power output achieved during field-forcing in response to a 0.85 per unit nominal voltage on the high-side terminals of the generator step-up transformer prior to field-forcing	The overcurrent element shall be set greater than 115% of the calculated current derived from: (1) Real Power output – 100% of the aggregate generation gross MW reported to the Transmission Planner, and (2) Reactive Power output –100% of the aggregate generation maximum gross Mvar output during field-forcing as determined by simulation
	The same application continues on the next page with a different relay type			

[7] If the relay is installed on the high-side of the GSU transformer use, Option 15.

Table 1. Relay Loadability Evaluation Criteria

Application	Relay Type	Option	Bus Voltage[5]	Setting Criteria
Relays installed on generator-side[8] of the Generator step-up transformer(s) connected to synchronous generators	Phase directional overcurrent relay (e.g., 67) – directional toward the Transmission system	9a	Generator bus voltage corresponding to 0.95 per unit of the high-side nominal voltage times the turns ratio of the generator step-up transformer	The overcurrent element shall be set greater than 115% of the calculated current derived from: (1) Real Power output – 100% of the aggregate generation gross MW reported to the Transmission Planner, and (2) Reactive Power output – 150% of the aggregate generation MW value, derived from the generator nameplate MVA rating at rated power factor
		OR		
		9b	Calculated generator bus voltage corresponding to 0.85 per unit nominal voltage on the high-side terminals of the generator step-up transformer (including the transformer turns ratio and impedance)	The overcurrent element shall be set greater than 115% of the calculated current derived from: (1) Real Power output – 100% of the aggregate generation gross MW reported to the Transmission Planner, and (2) Reactive Power output – 150% of the aggregate generation MW value, derived from the generator nameplate MVA rating at rated power factor
		OR		
		9c	Simulated generator bus voltage coincident with the highest Reactive Power output achieved during field-forcing in response to a 0.85 per unit nominal voltage on the high-side terminals of the generator step-up transformer prior to field-forcing	The overcurrent element shall be set greater than 115% of the calculated current derived from: (1) Real Power output – 100% of the aggregate generation gross MW reported to the Transmission Planner, and (2) Reactive Power output –100% of the aggregate generation maximum gross Mvar output during field-forcing as determined by simulation

A different application starts on the next page

[8] If the relay is installed on the high-side of the GSU transformer use, Option 16.

Table 1. Relay Loadability Evaluation Criteria

Application	Relay Type	Option	Bus Voltage[5]	Setting Criteria
Relays installed on generator-side of the Generator step-up transformer(s) connected to asynchronous generators only (including inverter-based installations)	Phase distance relay (e.g., 21) – directional toward the Transmission system[9]	10	Generator bus voltage corresponding to 1.0 per unit of the high-side nominal voltage times the turns ratio of the generator step-up transformer	The impedance element shall be set less than the calculated impedance derived from 130% of the maximum aggregate nameplate MVA output at rated power factor (including the Mvar output of any static or dynamic reactive power devices)
	Phase overcurrent relay (e.g., 50 or 51)[10]	11	Generator bus voltage corresponding to 1.0 per unit of the high-side nominal voltage times the turns ratio of the generator step-up transformer for overcurrent relays installed on the low-side	The overcurrent element shall be set greater than 130% of the calculated current derived from the maximum aggregate nameplate MVA output at rated power factor (including the Mvar output of any static or dynamic reactive power devices)
	Phase directional overcurrent relay (e.g., 67) – directional toward the Transmission system[11]	12	Generator bus voltage corresponding to 1.0 per unit of the high-side nominal voltage times the turns ratio of the generator step-up transformer	The overcurrent element shall be set greater than 130% of the calculated current derived from the maximum aggregate nameplate MVA output at rated power factor (including the Mvar output of any static or dynamic reactive power devices)

A different application starts on the next page

[9] If the relay is installed on the high-side of the GSU transformer, use Option 17.
[10] If the relay is installed on the high-side of the GSU transformer, use Option 18.
[11] If the relay is installed on the high-side of the GSU transformer, use Option 19.

Table 1. Relay Loadability Evaluation Criteria

Application	Relay Type	Option	Bus Voltage[5]	Setting Criteria
Unit auxiliary transformer(s) (UAT)	Phase overcurrent relay (e.g., 50 or 51) applied at the high-side terminals of the UAT, for which operation of the relay will cause the associated generator to trip	13a	1.0 per unit of the winding nominal voltage of the unit auxiliary transformer	The overcurrent element shall be set greater than 150% of the calculated current derived from the unit auxiliary transformer maximum nameplate MVA rating
		OR		
		13b	Unit auxiliary transformer bus voltage corresponding to the measured current	The overcurrent element shall be set greater than 150% of the unit auxiliary transformer measured current at the generator maximum gross MW capability reported to the Transmission Planner
Relays installed on the high-side of the GSU transformer,[12] including relays installed on the remote end of line, for Elements that connect the GSU transformer(s) to the Transmission system that are used exclusively to export energy directly from a BES generating unit or generating plant (except that Elements may also supply generating plant loads) – connected to synchronous generators	Phase distance relay (e.g., 21) – directional toward the Transmission system	14a	0.85 per unit of the line nominal voltage at the relay location	The impedance element shall be set less than the calculated impedance derived from 115% of: (1) Real Power output – 100% of the aggregate generation gross MW reported to the Transmission Planner, and (2) Reactive Power output – 120% of the aggregate generation MW value, derived from the generator nameplate MVA rating at rated power factor
		OR		
		14b	Simulated line voltage at the relay location coincident with the highest Reactive Power output achieved during field-forcing in response to a 0.85 per unit of the line nominal voltage at the remote end of the line prior to field-forcing	The impedance element shall be set less than the calculated impedance derived from 115% of: (1) Real Power output – 100% of the aggregate generation gross MW reported to the Transmission Planner, and (2) Reactive Power output –100% of the aggregate generation maximum gross Mvar output during field-forcing as determined by simulation
	The same application continues on the next page with a different relay type			

[12] If the relay is installed on the generator-side of the GSU transformer, use Option 7.

Table 1. Relay Loadability Evaluation Criteria

Application	Relay Type	Option	Bus Voltage[5]	Setting Criteria
Relays installed on the high-side of the GSU transformer,[13] including relays installed at the remote end of the line, for Elements that connect the GSU transformer(s) to the Transmission system that are used exclusively to export energy directly from a BES generating unit or generating plant (except that Elements may also supply generating plant loads) – connected to synchronous generators	Phase instantaneous overcurrent supervisory element (e.g., 50) – associated with current-based, communication-assisted schemes where the scheme is capable of tripping for loss of communications and/or phase time overcurrent relay (e.g., 51)	15a	0.85 per unit of the line nominal voltage at the relay location	The overcurrent element shall be set greater than 115% of the calculated current derived from: (1) Real Power output – 100% of the aggregate generation gross MW reported to the Transmission Planner, and (2) Reactive Power output – 120% of the aggregate generation MW value, derived from the generator nameplate MVA rating at rated power factor
		OR		
		15b	Simulated line voltage at the relay location coincident with the highest Reactive Power output achieved during field-forcing in response to a 0.85 per unit of the line nominal voltage at the remote end of the line prior to field-forcing	The overcurrent element shall be set greater than 115% of the calculated current derived from: (1) Real Power output – 100% of the aggregate generation gross MW reported to the Transmission Planner, and (2) Reactive Power output –100% of the aggregate generation maximum gross Mvar output during field-forcing as determined by simulation
	The same application continues on the next page with a different relay type			

[13] If the relay is installed on the generator-side of the GSU transformer, use Option 8.

Table 1. Relay Loadability Evaluation Criteria

Application	Relay Type	Option	Bus Voltage[5]	Setting Criteria
Relays installed on the high-side of the GSU transformer,[14] including relays installed at the remote end of the line, for Elements that connect the GSU transformer(s) to the Transmission system that are used exclusively to export energy directly from a BES generating unit or generating plant (except that Elements may also supply generating plant load.) –connected to synchronous generators	Phase directional instantaneous overcurrent supervisory element (e.g., 67) – associated with current-based, communication-assisted schemes where the scheme is capable of tripping for loss of communications directional toward the Transmission system and/or phase directional time overcurrent relay (e.g., 67) – directional toward the Transmission system	16a	0.85 per unit of the line nominal voltage at the relay location	The overcurrent element shall be set greater than 115% of the calculated current derived from: (1) Real Power output – 100% of the aggregate generation gross MW reported to the Transmission Planner, and (2) Reactive Power output – 120% of the aggregate generation MW value, derived from the generator nameplate MVA rating at rated power factor
		OR		
		16b	Simulated line voltage at the relay location coincident with the highest Reactive Power output achieved during field-forcing in response to a 0.85 per unit of the line nominal voltage at the remote end of the line prior to field-forcing	The overcurrent element shall be set greater than 115% of the calculated current derived from: (1) Real Power output – 100% of the aggregate generation gross MW reported to the Transmission Planner, and (2) Reactive Power output –100% of the aggregate generation maximum gross Mvar output during field-forcing as determined by simulation

A different application starts on the next page

[14] If the relay is installed on the generator-side of the GSU transformer, use Option 9.

Table 1. Relay Loadability Evaluation Criteria				
Application	**Relay Type**	**Option**	**Bus Voltage[5]**	**Setting Criteria**
Relays installed on the high-side of the GSU transformer,[15] including relays installed on the remote end of line, for Elements that connect the GSU transformer(s) to the Transmission system that are used exclusively to export energy directly from a BES generating unit or generating plant (except that Elements may also supply generating plant loads) –connected to asynchronous generators only (including inverter-based installations)	Phase distance relay (e.g., 21) – directional toward the Transmission system	17	1.0 per unit of the line nominal voltage at the relay location	The impedance element shall be set less than the calculated impedance derived from 130% of the maximum aggregate nameplate MVA output at rated power factor (including the Mvar output of any static or dynamic reactive power devices)
	The same application continues on the next page with a different relay type			

[15] If the relay is installed on the generator-side of the GSU transformer, use Option 10.

Table 1. Relay Loadability Evaluation Criteria				
Application	**Relay Type**	**Option**	**Bus Voltage[5]**	**Setting Criteria**
Relays installed on the high-side of the GSU transformer,[16] including, relays installed on the remote end of the line, for Elements that connect the GSU transformer(s) to the Transmission system that are used exclusively to export energy directly from a BES generating unit or generating plant (except that Elements may also supply generating plant loads) – connected to asynchronous generators only (including inverter-based installations)	Phase instantaneous overcurrent supervisory element (e.g., 50) – associated with current-based, communication-assisted schemes where the scheme is capable of tripping for loss of communications and/or Phase time overcurrent relay (e.g., 51)	18	1.0 per unit of the line nominal voltage at the relay location	The overcurrent element shall be set greater than 130% of the calculated current derived from the maximum aggregate nameplate MVA output at rated power factor (including the Mvar output of any static or dynamic reactive power devices)
	The same application continues on the next page with a different relay type			

[16] If the relay is installed on the generator-side of the GSU transformer, use Option 11.

Table 1. Relay Loadability Evaluation Criteria				
Application	**Relay Type**	**Option**	**Bus Voltage[5]**	**Setting Criteria**
Relays installed on the high-side of the GSU transformer,[17] including relays installed on the remote end of the line, for Elements that connect the GSU transformer(s) to the Transmission system that are used exclusively to export energy directly from a BES generating unit or generating plant (except that Elements may also supply generating plant loads) –connected to asynchronous generators only (including inverter-based installations)	Phase directional instantaneous overcurrent supervisory element (e.g., 67) – associated with current-based, communication-assisted schemes where the scheme is capable of tripping for loss of communications directional toward the Transmission system and/or Phase directional time overcurrent relay (e.g., 67)	19	1.0 per unit of the line nominal voltage at the relay location	The overcurrent element shall be set greater than 130% of the calculated current derived from the maximum aggregate nameplate MVA output at rated power factor (including the Mvar output of any static or dynamic reactive power devices)
End of Table 1				

[17] If the relay is installed on the generator-side of the GSU transformer, use Option 12.

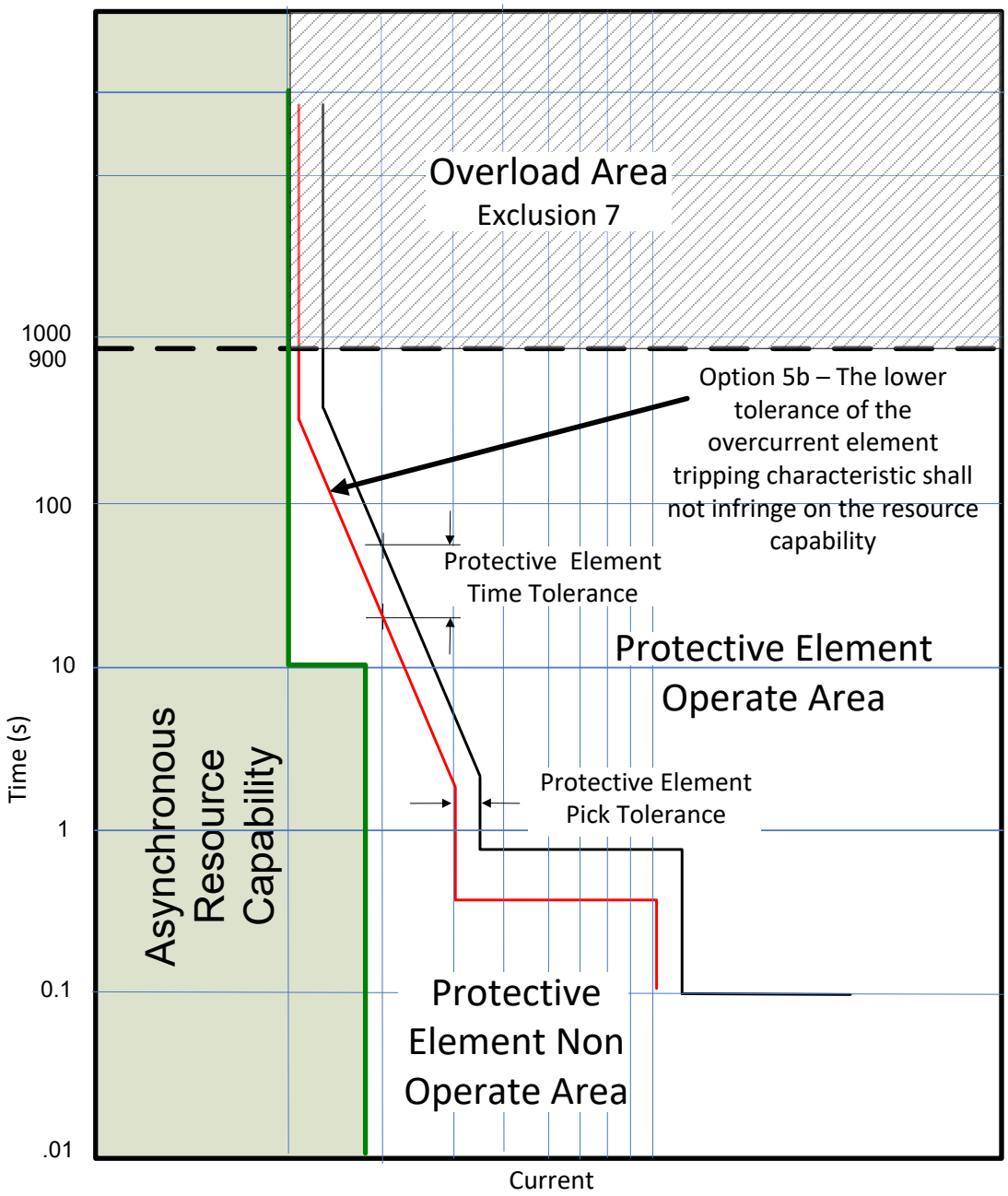

Figure A

This figure is for demonstration of Option 5b and does not mandate a specific type of protective curve or device manufacturer.

PRC-025-2 Guidelines and Technical Basis

Introduction

The document, "Considerations for Power Plant and Transmission System Protection Coordination," published by the NERC System Protection and Control Subcommittee (SPCS) provides extensive general discussion about the protective functions and generator performance addressed within this standard. This document was last revised in July 2015.[18]

The basis for the standard's loadability criteria for relays applied at the generator terminals or low-side of the generator step-up (GSU) transformer is the dynamic generating unit loading values observed during the August 14, 2003 blackout, other subsequent system events, and simulations of generating unit response to similar system conditions. The Reactive Power output observed during field-forcing in these events and simulations approaches a value equal to 150 percent of the Real Power (MW) capability of the generating unit when the generator is operating at its Real Power capability. In the SPCS technical reference document, two operating conditions were examined based on these events and simulations: (1) when the unit is operating at rated Real Power in MW with a level of Reactive Power output in Mvar which is equivalent to 150 percent times the rated MW value (representing some level of field-forcing) and (2) when the unit is operating at its declared low active Real Power operating limit (e.g., 40 percent of rated Real Power) with a level of Reactive Power output in Mvar which is equivalent to 175 percent times the rated MW value (representing some additional level of field-forcing).

Both conditions noted above are evaluated with the GSU transformer high-side voltage at 0.85 per unit. These load operating points are believed to be conservatively high levels of Reactive Power out of the generator with a 0.85 per unit high-side voltage which was based on these observations. However, for the purposes of this standard it was determined that the second load point (40 percent) offered no additional benefit and only increased the complexity for an entity to determine how to comply with the standard. Given the conservative nature of the criteria, which may not be achievable by all generating units, an alternate method is provided to determine the Reactive Power output by simulation. Also, to account for Reactive Power losses in the GSU transformer, a reduced level of output of 120 percent times the rated MW value is provided for relays applied at the high-side of the GSU transformer and on Elements that connect a GSU transformer to the Transmission system and are used exclusively to export energy directly from a BES generating unit or generating plant.

The phrase, "while maintaining reliable fault protection" in Requirement R1, describes that the Generator Owner, Transmission Owner, and Distribution Provider is to comply with this standard while achieving its desired protection goals. Load-responsive protective relays, as addressed within this standard, may be intended to provide a variety of backup protection functions, both within the generating unit or generating plant and on the Transmission system, and this standard is not intended to result in the loss of these protection functions. Instead, it is

[18] http://www.nerc.com/comm/PC/System%20Protection%20and%20Control%20Subcommittee%20SPCS%2020/SPCS%20Gen%20Prot%20Coordination%20Technical%20Reference%20Document.pdf.

suggested that the Generator Owner, Transmission Owner, and Distribution Provider consider both the requirement within this standard and its desired protection goals, and perform modifications to its protective relays or protection philosophies as necessary to achieve both.

For example, if the intended protection purpose is to provide backup protection for a failed Transmission breaker, it may not be possible to achieve this purpose while complying with this standard if a simple mho relay is being used. In this case, it may be possible to meet this purpose by replacing the legacy relay with a modern advanced-technology relay that can be set using functions such as load encroachment. It may otherwise be necessary to reconsider whether this is an appropriate method of achieving protection for the failed Transmission breaker, and whether this protection can be better provided by, for example, applying a breaker failure relay with a transfer trip system.

Requirement R1 establishes that the Generator Owner, Transmission Owner, and Distribution Provider must understand the applications of Attachment 1: Relay Settings, Table 1: Relay Loadability Evaluation Criteria ("Table 1") in determining the settings that it must apply to each of its load-responsive protective relays to prevent an unnecessary trip of its generator during the system conditions anticipated by this standard.

Applicability

To achieve the reliability objective of this standard it is necessary to include all load-responsive protective relays that are affected by increased generator output in response to system disturbances. This standard is therefore applicable to relays applied by the Generator Owner, Transmission Owner, and Distribution Provider at the terminals of the generator, GSU transformer, unit auxiliary transformer (UAT), Elements that connect a GSU transformer to the Transmission system that are used exclusively to export energy directly from a BES generating unit or generating plant, and Elements utilized in the aggregation of dispersed power producing resources.

The Generator Owner's interconnection facility (in some cases labeled a "transmission Facility" or "generator leads") consists of Elements between the GSU transformer and the interface with the portion of the Bulk Electric System (BES) where Transmission Owners take over the ownership. This standard does not use the industry recognized term "generator interconnection Facility" consistent with the work of Project 2010-07 (Generator Requirements at the Transmission Interface), because the term generator interconnection Facility implies ownership by the Generator Owner. Instead, this standard refers to these Facilities as "Elements that connect a GSU transformer to the Transmission system that are used exclusively to export energy directly from a BES generating unit or generating plant" to include these Facilities when they are also owned by the Transmission Owner or Distribution Provider. The load-responsive protective relays in this standard for which an entity shall be in compliance are dependent on the location and the application of the protective functions. Figures 1, 2, and 3 illustrate various generator interface connections with the Transmission system, and Figure 4 illustrates examples of Elements utilized in the aggregation of dispersed power resources that are in scope of the standard.

Figure 1

Figure 1 is a single (or set) of generators connected to the Transmission system through a radial line that is used exclusively to export energy directly from a BES generating unit or generating plant to the network. The protective relay R1 located on the high-side of the GSU transformer breaker CB100 is generally applied to provide backup protection to the relaying located at Bus A and in some cases Bus B. Under this application, relay R1 would apply the loadability requirement in PRC-025-2 using an appropriate option for the application from Table 1 (e.g., Options 14 through 19) for Elements that connect a GSU transformer to the Transmission system that are used exclusively to export energy directly from a BES generating unit or generating plant.

The protective relay R2 located on the incoming source breaker CB102 to the generating plant applies relaying that primarily protects the line by using line differential relaying from Bus A to B and also provides backup protection to the transmission relaying at Bus B. In this case, the relay function that provides line protection would apply the loadability requirement in PRC-025-2 and an appropriate option for the application from Table 1 (e.g., 15a, 15b, 16a, 16b, 18, and 19) for phase overcurrent supervisory elements (i.e., phase fault detectors) associated with current-based, communication-assisted schemes (i.e., pilot wire, phase comparison, and line current differential) where the scheme is capable of tripping for loss of communications. The backup protective function would apply the requirement in the PRC-025-2 standard using an appropriate option for the application from Table 1 (e.g., Options 14 through 19) for Elements that connect a GSU transformer to the Transmission system that are used exclusively to export energy directly from a BES generating unit or generating plant.

Since Elements that connect the GSU transformer(s) to the Transmission system that are used exclusively to export energy directly from a BES generating unit or generating plant are applicable to the standard, the loadability for relays applied on these Elements as shown in the shaded area of Figure 1 (i.e., CB102 and CB103) must be considered. If relay R2 or R3 is set with an element directional toward the transmission system (e.g., Buses B, C and D) or are non-directional, the relay would be affected by increased generator output in response to system disturbances and must meet the loadability setting criteria described in the standard. If relay R2 or R3 is set with an element directional toward the generator (e.g., Bus A), the relay would not be affected by increased generator output in response to system disturbances; therefore, the entity would not be required to apply the loadability setting criteria described in this standard.

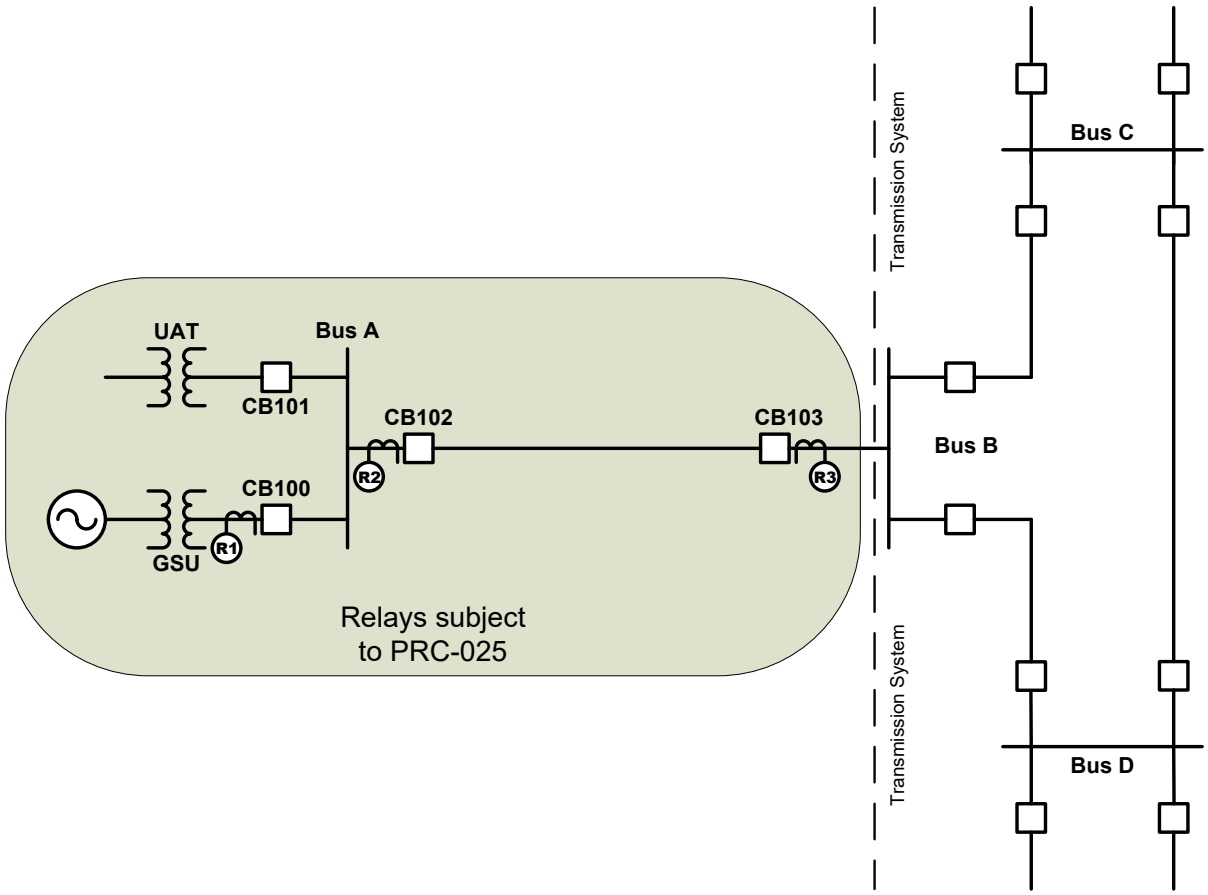

Figure 1: Generation exported through a single radial line

Figure 2

Figure 2 is an example of a single (or set) of generators connected to the Transmission system through multiple lines that are used exclusively to export energy directly from a BES generating unit or generating plant to the network. The protective relay R1 on the high-side of the GSU transformer breaker CB100 is generally applied to provide backup protection to the Transmission relaying located at Bus A and in some cases Bus B. Under this application, relay R1 would apply the loadability requirement in PRC-025-2 using an appropriate option for the application from Table 1 (e.g., Options 14 through 19) for Elements that connect a GSU transformer to the Transmission system that are used exclusively to export energy directly from a BES generating unit or generating plant.

The protective relays R2 and R3 located on the incoming source breakers CB102 and CB103 to the generating plant applies relaying that primarily protects the line from Bus A to B and also provides backup protection to the transmission relaying at Bus B. In this case, the relay function that provides line protection would apply the loadability requirement in PRC-025-2 and an appropriate option for the application from Table 1 (e.g., Options 15a, 15b, 16a, 16b, 18, and 19) for phase overcurrent supervisory elements (i.e., phase fault detectors) associated with current-based, communication-assisted schemes (i.e., pilot wire, phase comparison, and line

current differential) where the scheme is capable of tripping for loss of communications. The backup protective function would apply the requirement in the PRC-025-2 standard using an appropriate option for the application from Table 1 (e.g., Options 14 through 19) for Elements that connect a GSU transformer to the Transmission system that are used exclusively to export energy directly from a BES generating unit or generating plant.

Since Elements that connect the GSU transformer(s) to the Transmission system that are used exclusively to export energy directly from a BES generating unit or generating plant are applicable to the standard, the loadability for relays applied on these Elements as shown in the shaded area of Figure 2 (i.e., CB102, CB103, CB104, and CB105) must be considered. If relay R2, R3, R4, or R5 is set with an element directional toward the transmission system (e.g., Buses B, C and D) or are non-directional, the relay would be affected by increased generator output in response to system disturbances and must meet the loadability setting criteria described in the standard. If relay R2, R3, R4, or R5 is set with an element directional toward the generator (e.g., Bus A), the relay would not be affected by increased generator output in response to system disturbances; therefore, the entity would not be required to apply the loadability setting criteria described in this standard.

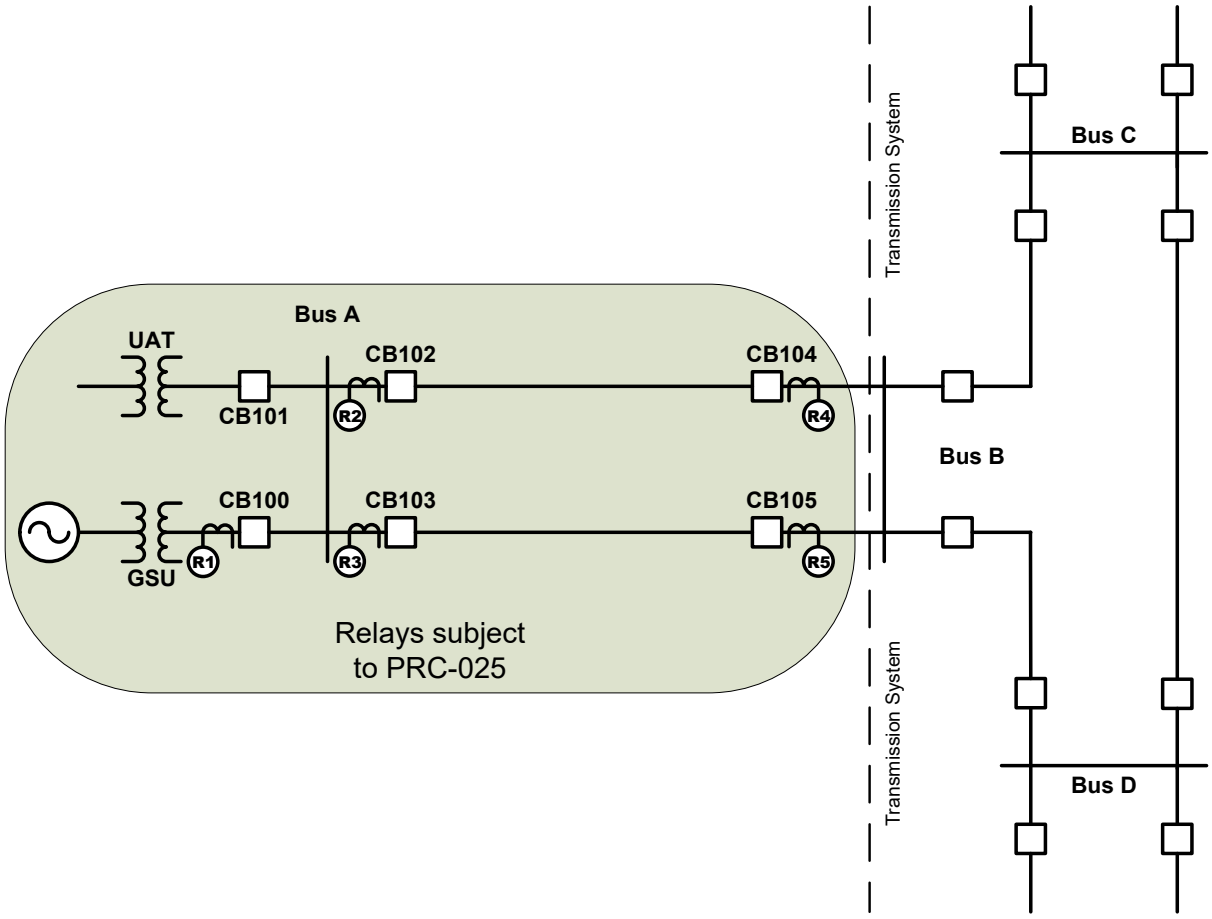

Figure 2: Generation exported through multiple radial lines

Figure 3

Figure 3 is example a single (or set) of generators exporting power dispersed through multiple lines to the Transmission system through a network. The protective relay R1 on the high-side of the GSU transformer breaker CB100 is generally applied to provide backup protection to the Transmission relaying located at Bus A and in some cases Bus C or Bus D. Under this application, relay R1 would apply the applicable loadability requirement in PRC-025-2 using an appropriate option for the application from Table 1 (e.g., Options 14 through 19) for Elements that connect a GSU transformer to the Transmission system that are used exclusively to export energy directly from a BES generating unit or generating plant.

Since the lines from Bus A to Bus C and from Bus A to Bus D are part of the transmission network, these lines would not be considered as Elements that connect a GSU transformer to the Transmission system that are used exclusively to export energy directly from a BES generating unit or generating plant. Therefore, the applicable responsible entity would be responsible for the load-responsive protective relays R2 and R3 under the PRC-023 standard. The applicable responsible entity's loadability relays R4 and R5 located on the breakers CB104 and CB105 at Bus C and D are also subject to the requirements of the PRC-023 standard.

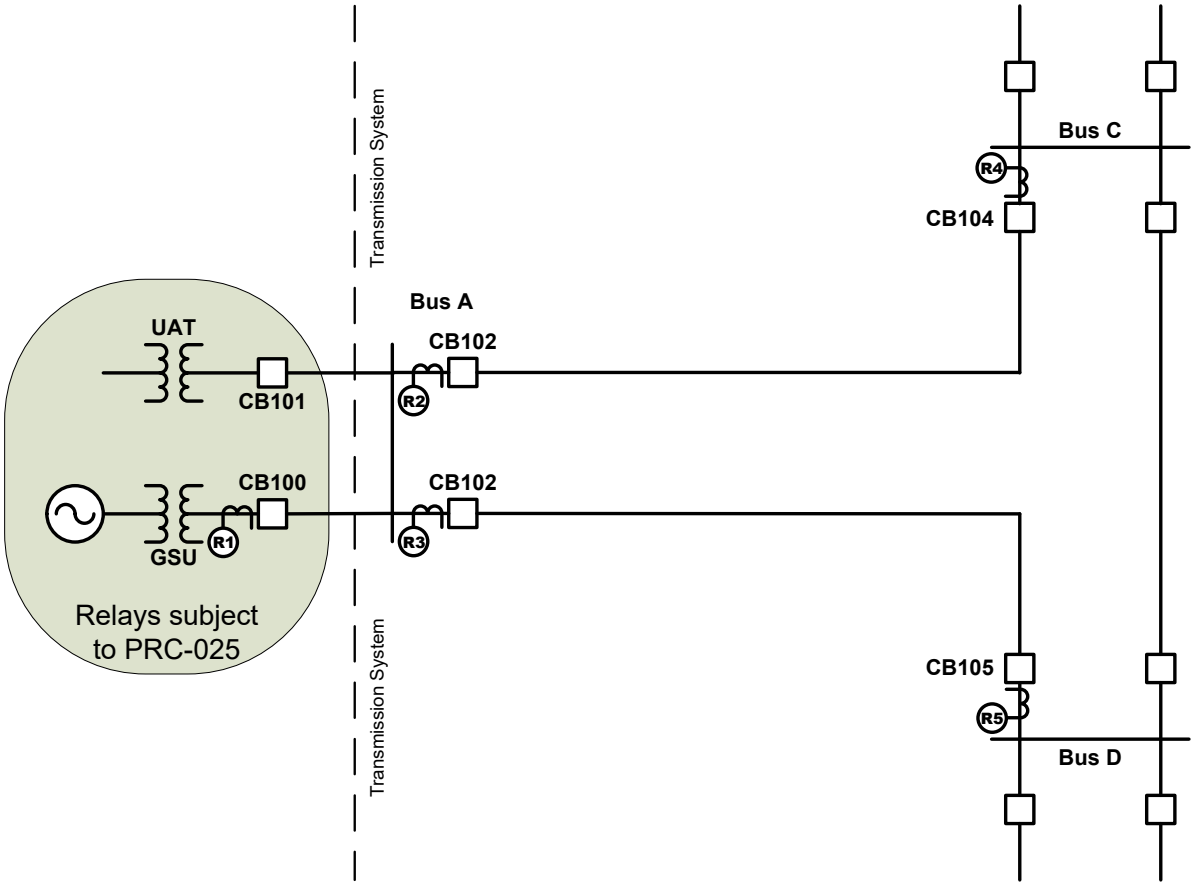

Figure 3: Generation exported through a network

This standard is also applicable to the UATs that supply station service power to support the on-line operation of generating units or generating plants. These transformers are variably referred to as station power, unit auxiliary transformer(s), or station service transformer(s) used to provide overall auxiliary power to the generator station when the generator is running. Inclusion of these transformers satisfies a directive in FERC Order No. 733, paragraph 104, which directs NERC to include in this standard a loadability requirement for relays used for overload protection of the UAT(s) that supply normal station service for a generating unit. The NERC System Protection and Control Subcommittee addressed low-side UAT protection in the document called *Unit Auxiliary Transformer Overcurrent Relay Loadability During a Transmission Depressed Voltage Condition*,[19] March 2016.

Figure 4

Elements utilized in the aggregation of dispersed power producing resources (in some cases referred to as a "collector system" or "feeders") consist of the Elements between individual generating units and the common point of interconnection to the Transmission system.

[19] http://www.nerc.com/comm/PC/System%20Protection%20and%20Control%20Subcommittee%20SPCS%2020/NERC%20-%20SPCS%20UAT%20-%20FEB_2016_final.pdf.

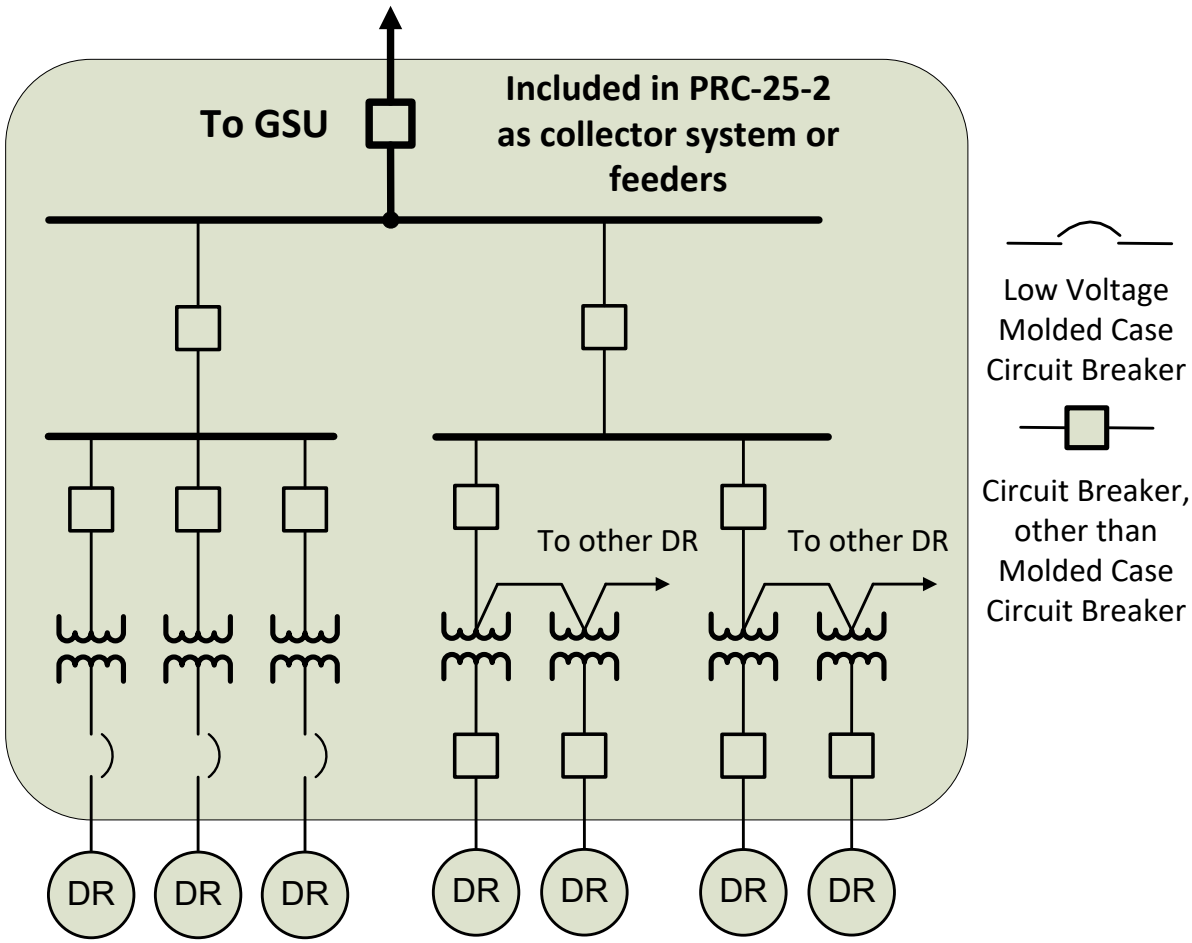

Figure-4: Elements utilized in the aggregation of dispersed power producing resources (DR)

Synchronous Generator Performance

When a synchronous generator experiences a depressed voltage, the generator will respond by increasing its Reactive Power output to support the generator terminal voltage. This operating condition, known as "field-forcing," results in the Reactive Power output exceeding the steady-state capability of the generator and may result in operation of generation system load-responsive protective relays if they are not set to consider this operating condition. The ability of the generating unit to withstand the increased Reactive Power output during field-forcing is limited by the field winding thermal withstand capability. The excitation limiter will respond to begin reducing the level of field-forcing in as little as one second, but may take much longer, depending on the level of field-forcing given the characteristics and application of the excitation system. Since this time may be longer than the time-delay of the generator load-responsive protective relay, it is important to evaluate the loadability to prevent its operation for this condition.

The generator bus voltage during field-forcing will be higher than the high-side voltage due to the voltage drop across the GSU transformer. When the relay voltage is supplied from the generator bus, it is necessary to assess loadability using the generator bus voltage. The criteria established within Table 1 are based on 0.85 per unit of the line nominal voltage. This voltage was widely observed during the events of August 14, 2003, and was determined during the analysis of the events to represent a condition from which the System may have recovered, had other undesired behavior not occurred.

The dynamic load levels specified in Table 1 under column "Setting Criteria" are representative of the maximum expected apparent power during field-forcing with the Transmission system voltage at 0.85 per unit, for example, at the high-side of the GSU transformer. These values are based on records from the events leading to the August 14, 2003 blackout, other subsequent System events, and simulations of generating unit responses to similar conditions. Based on these observations, the specified criteria represent conservative but achievable levels of Reactive Power output of the generator with a 0.85 per unit high-side voltage at the point of interconnection.

The dynamic load levels were validated by simulating the response of synchronous generating units to depressed Transmission system voltages for 67 different generating units. The generating units selected for the simulations represented a broad range of generating unit and excitation system characteristics as well as a range of Transmission system interconnection characteristics. The simulations confirmed, for units operating at or near the maximum Real Power output, that it is possible to achieve a Reactive Power output of 1.5 times the rated Real Power output when the Transmission system voltage is depressed to 0.85 per unit. While the simulations demonstrated that all generating units may not be capable of this level of Reactive Power output, the simulations confirmed that approximately 20 percent of the units modeled in the simulations could achieve these levels. On the basis of these levels, Table 1, Options 1a (i.e., 0.95 per unit) and 1b (i.e., 0.85 per unit), for example, are based on relatively simple, but conservative calculations of the high-side nominal voltage. In recognition that not all units are capable of achieving this level of output Option 1c (i.e., simulation) was developed to allow the Generator Owner, Transmission Owner, or Distribution Provider to simulate the output of a generating unit when the simple calculation is not adequate to achieve the desired protective relay setting.

Dispersed Generation

This standard is applicable to dispersed generation such as wind farms and solar arrays. The intent of this standard is to ensure the aggregate facility as defined above will remain on-line during a system disturbance; therefore, all output load-responsive protective relays associated with the facility are included in PRC-025.

Dispersed power producing resources with aggregate capacity greater than 75 MVA (gross aggregate nameplate rating) utilizing a system designed primarily for aggregating capacity, connected at a common point at a voltage of 100 kV or above are included in PRC-025-2. Load-responsive protective relays that are applied on Elements that connect these individual

generating units through the point of interconnection with the Transmission system are within the scope of PRC-025-2. For example, feeder overcurrent relays and feeder step-up transformer overcurrent relays (see Figure 6) are included because these relays are challenged by generator loadability.

In the case of solar arrays where there are multiple voltages utilized in converting the solar panel DC output to a 60Hz AC waveform, the "terminal" is defined at the 60Hz AC output of the inverter-solar panel combination.

Asynchronous Generator Performance

Asynchronous generators will not respond to a disturbance with the same magnitude of apparent power that a synchronous generator will respond. Asynchronous generators, though, will support the system during a disturbance. Inverter-based generators will provide Real Power and Reactive Power (depending on the installed capability and regional grid code requirements) and may even provide a faster Reactive Power response than a synchronous generator. The magnitude of this response may slightly exceed the steady-state capability of the inverter but only for a short duration before limiter functions will activate. Although induction generators will not inherently supply Reactive Power, induction generator installations may include static and/or dynamic reactive devices, depending on regional grid code requirements. These devices also may provide Real Power during a voltage disturbance. Thus, tripping asynchronous generators may exacerbate a disturbance.

Inverters, including wind turbines (i.e., Types 3 and 4) and photovoltaic solar, are commonly available with 0.90 power factor capability. This calculates to an apparent power magnitude of 1.11 per unit of rated MW.

Similarly, induction generator installations, including Type 1 and Type 2 wind turbines, often include static and/or dynamic reactive devices to meet grid code requirements and may have apparent power output similar to inverter-based installations; therefore, it is appropriate to use the criteria established in the Table 1 (i.e., Options 4, 5, 6, 10, 11, 12, 17, 18, and 19) for asynchronous generator installations.

Synchronous Generator Simulation Criteria

The Generator Owner, Transmission Owner, or Distribution Provider who elects a simulation option to determine the synchronous generator performance on which to base relay settings may simulate the response of a generator by lowering the Transmission system voltage at the remote end of the line or at the high-side of the GSU transformer (as prescribed by the Table 1 criteria). This can be simulated by means such as modeling the connection of a shunt reactor at the remote end of the line or at the GSU transformer high-side to lower the voltage to 0.85 per unit prior to field-forcing. The resulting step change in voltage is similar to the sudden voltage depression observed in parts of the Transmission system on August 14, 2003. The initial condition for the simulation should represent the generator at 100 percent of the maximum gross Real Power capability in MW as reported to the Transmission Planner. The simulation is used to determine the Reactive Power and voltage at the relay location to calculate relay

setting limits. The Reactive Power value obtained by simulation is the highest simulated level of Reactive Power achieved during field-forcing. The voltage value obtained by simulation is the simulated voltage coincident with the highest Reactive Power achieved during field-forcing. These values of Reactive Power and voltage correspond to the minimum apparent impedance and maximum current observed during field-forcing.

Phase Distance Relay – Directional Toward Transmission System (e.g., 21)

Generator phase distance relays that are directional toward the Transmission system, whether applied for the purpose of primary or backup GSU transformer protection, external system backup protection, or both, were noted during analysis of the August 14, 2003 disturbance event to have unnecessarily or prematurely tripped a number of generating units or generating plants, which contributed to the scope of that disturbance. Specifically, eight generators are known to have been tripped by this protection function. These options establish criteria for phase distance relays that are directional toward the Transmission system to help assure that generators, to the degree possible, will provide System support during disturbances in an effort to minimize the scope of those disturbances.

The phase distance relay that is directional toward the Transmission system measures impedance derived from the quotient of generator terminal voltage divided by generator stator current.

Section 4.6.1.1 of IEEE C37.102-2006, "Guide for AC Generator Protection," describes the purpose of this protection as follows (emphasis added):

> *"The distance relay applied for this function is intended to isolate the generator from the power system for a fault* ***that is not cleared by the transmission line breakers.*** *In some cases this relay is set with a very long reach. A condition that causes the generator voltage regulator to boost generator excitation for a sustained period may result in the system apparent impedance, as monitored at the generator terminals, to fall within the operating characteristics of the distance relay. Generally, a distance relay setting of 150% to 200% of the generator MVA rating at its rated power factor has been shown to provide good coordination for stable swings, system faults involving in-feed, and* ***normal loading conditions.*** *However, this setting may also result in failure of the relay to operate for some line faults where the line relays fail to clear. It is recommended that the setting of these relays be evaluated between the generator protection engineers and the system protection engineers* ***to optimize coordination while still protecting the turbine generator****. Stability studies may be needed to help determine a set point to optimize protection and coordination. Modern excitation control systems include overexcitation limiting and protection devices to protect the*

> *generator field, but the time delay before they reduce excitation is several seconds. In distance relay applications for which the voltage regulator action could cause an incorrect trip, consideration should be given to reducing the reach of the relay and/or coordinating the tripping time delay with the time delays of the protective devices in the voltage regulator. Digital multifunction relays equipped with load encroachment binders [sic] can prevent misoperation for these conditions.* ***Within its operating zone, the tripping time for this relay must coordinate with the longest time delay for the phase distance relays on the transmission lines connected to the generating substation bus.*** *With the advent of multifunction generator protection relays, it is becoming more common to use two-phase distance zones. In this case, the second zone would be set as previously described. When two zones are applied for backup protection, the first zone is typically set to see the substation bus (120% of the GSU transformer). This setting should be checked for coordination with the zone-1 element on the shortest line off of the bus. The normal zone-2 time-delay criteria would be used to set the delay for this element. Alternatively, zone-1 can be used to provide high-speed protection for phase faults, in addition to the normal differential protection, in the generator and iso-phase bus with partial coverage of the GSU transformer. For this application, the element would typically be set to 50% of the transformer impedance with little or no intentional time delay. It should be noted that it is possible that this element can operate on an out-of-step power swing condition and provide misleading targeting."*

If a mho phase distance relay that is directional toward the Transmission system cannot be set to maintain reliable fault protection and also meet the criteria in accordance with Table 1, there may be other methods available to do both, such as application of blinders to the existing relays, implementation of lenticular characteristic relays, application of offset mho relays, or implementation of load encroachment characteristics. Some methods are better suited to improving loadability around a specific operating point, while others improve loadability for a wider area of potential operating points in the R-X plane. The operating point for a stressed System condition can vary due to the pre-event system conditions, severity of the initiating event, and generator characteristics such as Reactive Power capability.

For this reason, it is important to consider the potential implications of revising the shape of the relay characteristic to obtain a longer relay reach, as this practice may result in a relay characteristic that overlaps the capability of the generating unit when operating at a Real Power output level other than 100 percent of the maximum Real Power capability. Overlap of the relay characteristic and generator capability could result in tripping the generating unit for a loading condition within the generating unit capability. The examples in Appendix E of the

Considerations for Power Plant and Transmission System Protection Coordination technical reference document illustrate the potential for, and need to avoid, encroaching on the generating unit capability.

Phase Instantaneous Overcurrent Relay (e.g., 50)

The 50 element is a non-directional overcurrent element that typically has no intentional time delay. The primary application is for close-in high current faults where high speed operation is required or preferred. The instantaneous overcurrent elements are subject to the same loadability issues as the time overcurrent elements referenced in this standard.

Phase Time Overcurrent Relay (e.g., 51)

See Chapter 2 of the Considerations for Power Plant and Transmission System Protection Coordination technical reference document for a detailed discussion of this protection function. Note that the setting criteria established within the Table 1 options differ from the Considerations for Power Plant and Transmission System Protection Coordination technical reference document. Rather than establishing a uniform setting threshold of 200 percent of the generator MVA rating at rated power factor for all applications, the Table 1 setting criteria are based on the maximum expected generator Real Power output based on whether the generator is a synchronous or asynchronous unit.

Phase Time Overcurrent Relay – Voltage-Restrained (e.g., 51V-R)

Phase time overcurrent voltage-restrained relays (e.g., 51V-R), which change their sensitivity as a function of voltage, whether applied for the purpose of primary or backup GSU transformer protection, for external system phase backup protection, or both, were noted, during analysis of the August 14, 2003 disturbance event to have unnecessarily or prematurely tripped a number of generating units or generating plants, contributing to the scope of that disturbance. Specifically, 20 generators are known to have been tripped by voltage-restrained and voltage-controlled protection functions together. These protective functions are variably referred to by IEEE function numbers 51V, 51R, 51VR, 51V/R, 51V-R, or other terms. See Chapter 2 of the Considerations for Power Plant and Transmission System Protection Coordination technical reference document for a detailed discussion of this protection function.

Phase Time Overcurrent Relay – Voltage Controlled (e.g., 51V-C)

Phase time overcurrent voltage-controlled relays (e.g., 51V-C), enabled as a function of voltage, are variably referred to by IEEE function numbers 51V, 51C, 51VC, 51V/C, 51V-C, or other terms. See Chapter 2 of the Considerations for Power Plant and Transmission System Protection Coordination technical reference document for a detailed discussion of this protection function.

Phase Directional Overcurrent Relay – Directional Toward Transmission System (e.g., 67)

See Chapter 2 of the Considerations for Power Plant and Transmission System Protection Coordination technical reference document for a detailed discussion of the phase time overcurrent protection function. The basis for setting directional and non-directional overcurrent relays is similar. Note that the setting criteria established within the Table 1

options differ from of the Considerations for Power Plant and Transmission System Protection Coordination technical reference document. Rather than establishing a uniform setting threshold of 200 percent of the generator MVA rating at rated power factor for all applications, the Table 1 setting criteria are based on the maximum expected generator Real Power output based on whether the generator is a synchronous or asynchronous unit.

Table 1, Options

Introduction

The margins in the Table 1 options are based on guidance found in the Considerations for Power Plant and Transmission System Protection Coordination technical reference document. The generator bus voltage during field-forcing will be higher than the high-side voltage due to the voltage drop across the GSU transformer. When the relay voltage is supplied from the generator bus, it is necessary to assess loadability using the generator bus voltage.

Relay Connections

Figures 5 and 6 below illustrate the connections for each of the Table 1 options provided in PRC-025-2, Attachment 1: Relay Settings, Table 1: Relay Loadability Evaluation Criteria.

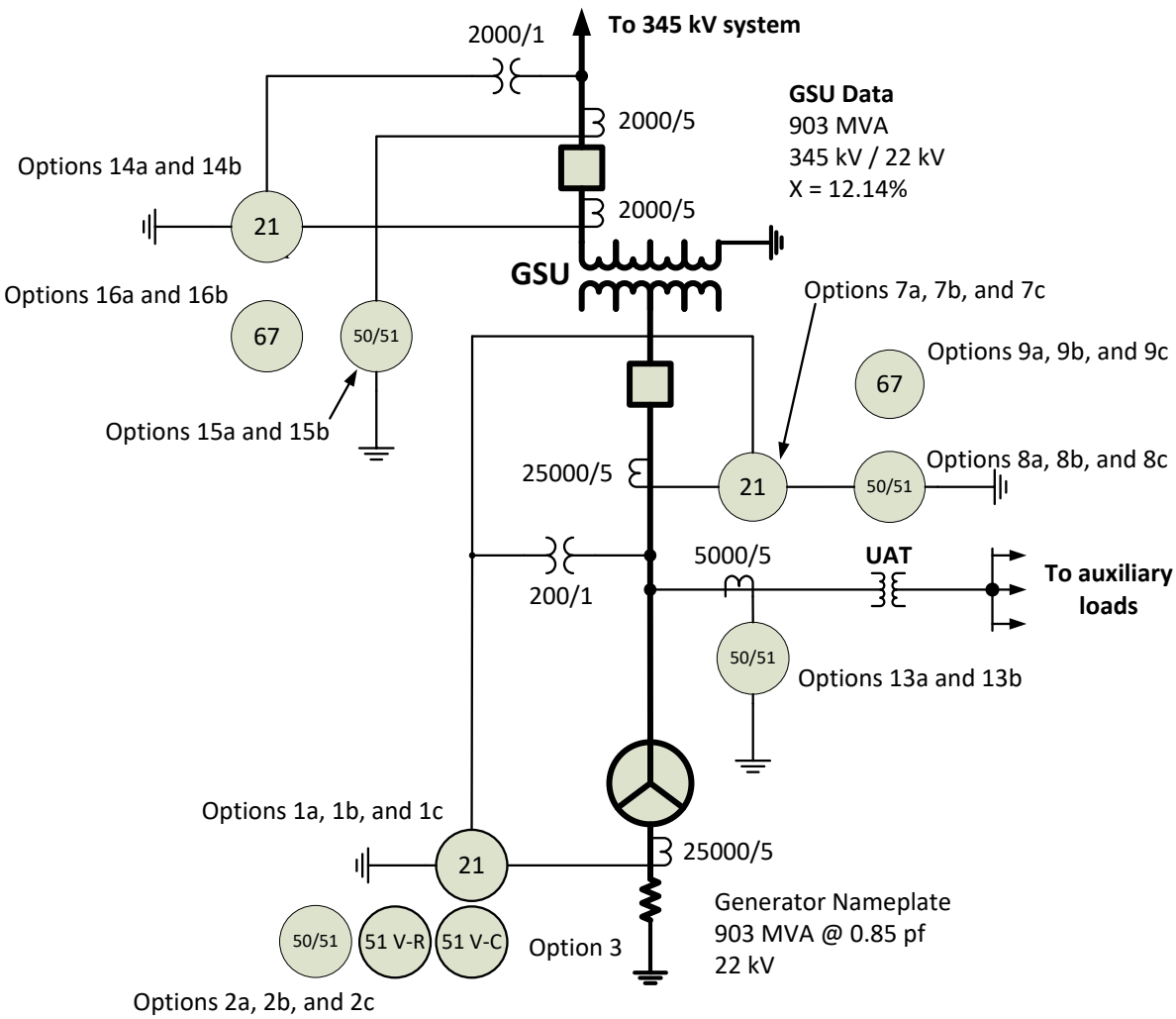

Figure 5: Relay Connection for corresponding synchronous options

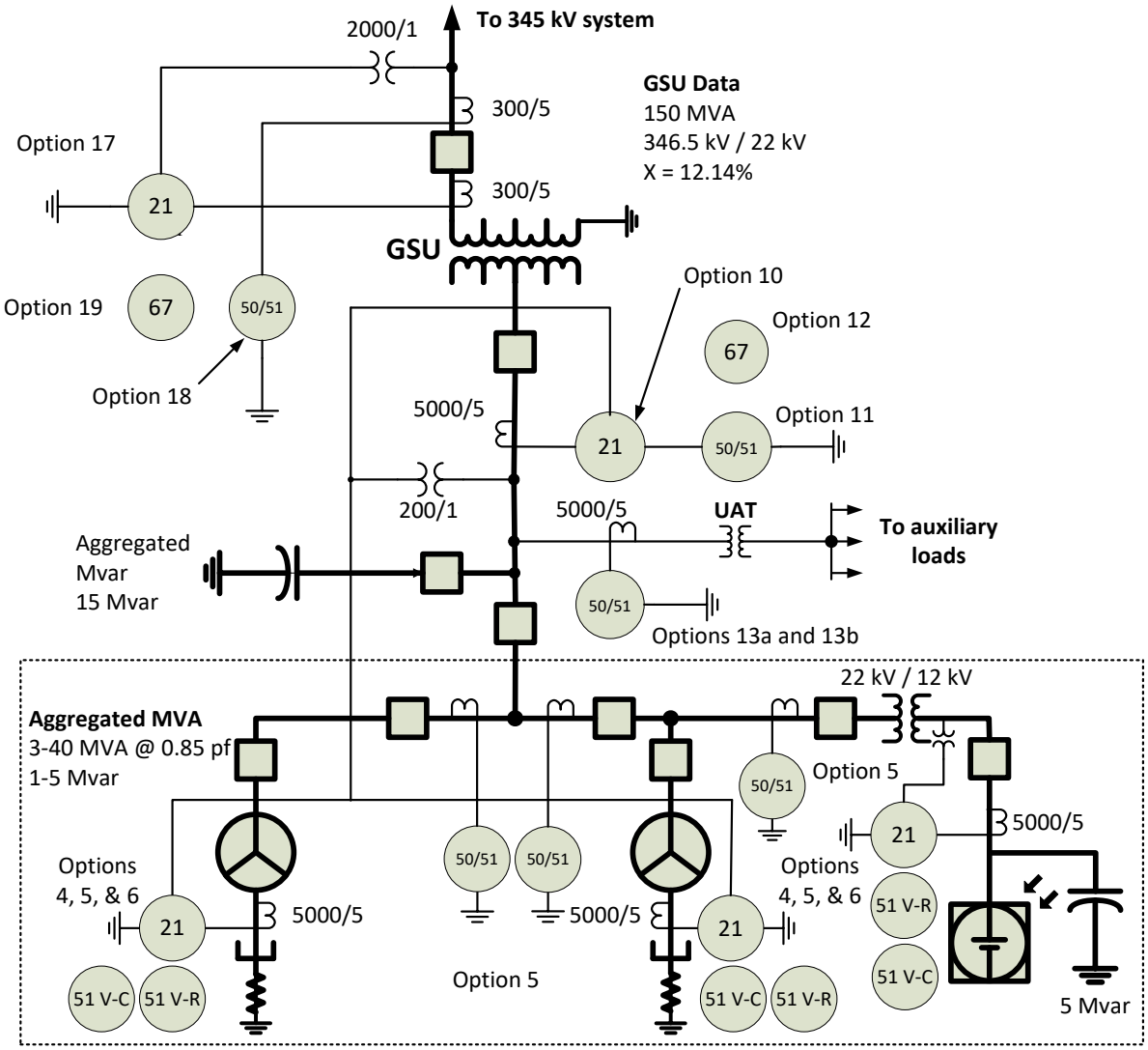

Figure 6: Relay Connection for corresponding asynchronous options including inverter-based installations

Synchronous Generators Phase Distance Relay – Directional Toward Transmission System (e.g., 21) (Options 1a, 1b, and 1c)

Table 1, Options 1a, 1b, and 1c, are provided for assessing loadability for synchronous generators applying phase distance relays that are directional toward the Transmission system. These margins are based on guidance found in Chapter 2 of the Considerations for Power Plant and Transmission System Protection Coordination technical reference document.

Option 1a calculates a generator bus voltage corresponding to 0.95 per unit nominal voltage on the high-side terminals of the GSU transformer. The generator bus voltage is calculated by multiplying the 0.95 per unit nominal voltage, at the high-side terminals of the GSU transformer, by the GSU transformer turns ratio (excluding the impedance). This calculation is a straightforward way to approximate the stressed system conditions.

Option 1b calculates the generator bus voltage corresponding to 0.85 per unit nominal voltage on the high-side terminals of the GSU transformer. The voltage drop across the GSU transformer is calculated based on a 0.85 per unit nominal voltage at the high-side terminals of the GSU transformer as well as the turns ratio and impedance. The actual generator bus voltage may be higher depending on the GSU transformer impedance and the actual Reactive Power achieved. This calculation is a more in-depth and precise method for setting of the impedance element than Option 1a.

Option 1c simulates the generator bus voltage coincident with the highest Reactive Power output achieved during field-forcing. This output is in response to a 0.85 per unit nominal voltage on the high-side terminals of the GSU transformer prior to field-forcing. Using simulation is a more involved, more precise setting of the impedance element overall.

For Options 1a and 1b, the impedance element shall be set less than the calculated impedance derived from 115 percent of both: the Real Power output of 100 percent of the maximum gross MW capability reported to the Transmission Planner, and the Reactive Power output that equates to 150 percent of the MW value, derived from the generator nameplate MVA rating at rated power factor.

For Option 1c, the impedance element shall be set less than the calculated impedance derived from 115 percent of both: the Real Power output of 100 percent of the maximum gross MW capability reported to the Transmission Planner, and the Reactive Power output that equates to 100 percent of the maximum gross Mvar output during field-forcing as determined by simulation.

Synchronous Generators Phase Overcurrent Relay – (e.g., 50, 51, or 51V-R – Voltage Restrained) (Options 2a, 2b, and 2c)

Table 1, Options 2a, 2b, and 2c, are provided for assessing loadability for synchronous generators applying phase overcurrent relays (e.g., 50, 51, or 51V-R – voltage-restrained). These margins are based on guidance found in Chapter 2 of the Considerations for Power Plant and Transmission System Protection Coordination technical reference document.

Option 2a calculates a generator bus voltage corresponding to 0.95 per unit nominal voltage on the high-side terminals of the GSU transformer. The generator bus voltage is calculated by multiplying the 0.95 per unit nominal voltage, at the high-side terminals of the GSU transformer, by the GSU transformer turns ratio (excluding the impedance). This calculation is a straightforward way to approximate the stressed system conditions.

Option 2b calculates the generator bus voltage corresponding to 0.85 per unit nominal voltage on the high-side terminals of the GSU transformer. The voltage drop across the GSU transformer is calculated based on a 0.85 per unit nominal voltage at the high-side terminals of the GSU transformer as well as for the turns ratio and impedance. The actual generator bus voltage may be higher depending on the GSU transformer impedance and the actual Reactive

Power achieved. This calculation is a more in-depth and precise method for setting of the overcurrent element than Option 2a.
Option 2c simulates the generator bus voltage coincident with the highest Reactive Power output achieved during field-forcing. This output is in response to a 0.85 per unit nominal voltage on the high-side terminals of the GSU transformer prior to field-forcing. Using simulation is a more involved, more precise setting of the overcurrent element overall.

For Options 2a and 2b, the overcurrent element shall be set greater than 115 percent of the calculated current derived from both: the Real Power output of 100 percent of the maximum gross MW capability reported to the Transmission Planner, and the Reactive Power output that equates to 150 percent of the MW value, derived from the generator nameplate MVA rating at rated power factor.

For Option 2c, the overcurrent element shall be set greater than the calculated current derived from 115 percent of both: the Real Power output of 100 percent of the maximum gross MW capability reported to the Transmission Planner, and the Reactive Power output that equates to 100 percent of the maximum gross Mvar output during field-forcing as determined by simulation.

Synchronous Generators Phase Time Overcurrent Relay – Voltage Controlled (e.g., 51V-C) (Option 3)

Table 1, Option 3, is provided for assessing loadability for synchronous generators applying phase time overcurrent relays which are enabled as a function of voltage ("voltage-controlled"). These margins are based on guidance found in Chapter 2 of the Considerations for Power Plant and Transmission System Protection Coordination technical reference document.

Option 3 calculates the generator bus voltage corresponding to 1.0 per unit nominal voltage on the high-side terminals of the GSU transformer. The generator bus voltage is calculated by multiplying the 1.0 per unit nominal voltage, at the high-side terminals of the GSU transformer, by the GSU transformer turns ratio (excluding the impedance). This is a simple calculation that approximates the stressed system conditions.

For Option 3, the voltage control setting shall be set less than 75 percent of the calculated generator bus voltage. The voltage setting must be set such that the function (e.g., 51V-C) will not trip under extreme emergency conditions as the time overcurrent function will be set less than generator full load current. Relays enabled as a function of voltage are indifferent as to the current setting, and this option simply requires that the relays not respond for the depressed voltage.

Asynchronous Generators Phase Distance Relay – Directional Toward Transmission System (e.g., 21) (Option 4)

Table 1, Option 4 is provided for assessing loadability for asynchronous generators applying phase distance relays that are directional toward the Transmission system. These margins are

based on guidance found in Chapter 2 of the Considerations for Power Plant and Transmission System Protection Coordination technical reference document.

Option 4 calculates the generator bus voltage corresponding to 1.0 per unit nominal voltage on the high-side terminals of the GSU transformer. The generator bus voltage is calculated by multiplying the 1.0 per unit nominal voltage, at the high-side terminals of the GSU transformer, by the GSU transformer turns ratio (excluding the impedance). This is a simple calculation that approximates the stressed system conditions.

Since the relay voltage is supplied from the generator bus, it is necessary to assess loadability using the generator-side voltage. Asynchronous generators do not produce as much Reactive Power as synchronous generators; the voltage drop due to Reactive Power flow through the GSU transformer is not as significant. Therefore, the generator bus voltage can be conservatively estimated by reflecting the high-side nominal voltage to the generator-side based on the GSU transformer's turns ratio.

For Option 4, the impedance element shall be set less than the calculated impedance derived from 130 percent of the maximum aggregate nameplate MVA output at rated power factor including the Mvar output of any static or dynamic Reactive Power devices. This is determined by summing the total MW and Mvar capability of the generation equipment behind the relay and any static or dynamic Reactive Power devices that contribute to the power flow through the relay.

Asynchronous Generators Phase Overcurrent Relay – (e.g., 50, 51, or 51V-R – Voltage Restrained) (Options 5a and 5b)

Table 1, Option 5a is provided for assessing loadability for asynchronous generators applying phase overcurrent relays (e.g., 50, 51, or 51V-R – voltage-restrained). These margins are based on guidance found in Chapter 2 of the Considerations for Power Plant and Transmission System Protection Coordination technical reference document.

Option 5a calculates the generator bus voltage corresponding to 1.0 per unit nominal voltage on the high-side terminals of the GSU transformer. The generator bus voltage is calculated by multiplying the 1.0 per unit nominal voltage, at the high-side terminals of the GSU transformer, by the GSU transformer turns ratio (excluding the impedance). This is a simple calculation that approximates the stressed system conditions.

Since the relay voltage is supplied from the generator bus, it is necessary to assess loadability using the generator-side voltage. Asynchronous generators do not produce as much Reactive Power as synchronous generators; the voltage drop due to Reactive Power flow through the GSU transformer is not as significant. Therefore, the generator bus voltage can be conservatively estimated by reflecting the high-side nominal voltage to the generator-side based on the GSU transformer's turns ratio.

For Option 5a, the overcurrent element shall be set greater than 130 percent of the calculated current derived from the maximum aggregate nameplate MVA output at rated power factor including the Mvar output of any static or dynamic Reactive Power devices. This is determined by summing the total MW and Mvar capability of the generation equipment behind the relay and any static or dynamic Reactive Power devices that contribute to the power flow through the relay.

For Option 5b, the overcurrent element shall be set to exceed the maximum capability of the asynchronous resource and applicable equipment (e.g., windings, power electronics, cables, or bus). This is determined by summing the total current capability of the generation equipment behind the overcurrent element and any static or dynamic Reactive Power devices that contribute to the power flow through the overcurrent element. The lower tolerance of the overcurrent element tripping characteristic shall be set to not infringe upon the resource capability (including the Mvar output of the resource and any static or dynamic reactive power devices). Figure A of PRC-025-2 illustrates that the overcurrent element does not infringe upon the asynchronous resource capability. The upper hashed area of Figure A represents Exclusion 7.

Asynchronous Generator Phase Time Overcurrent Relays – Voltage Controlled (e.g., 51V-C) (Option 6)

Table 1, Option 6, is provided for assessing loadability for asynchronous generators applying phase time overcurrent relays which are enabled as a function of voltage ("voltage-controlled"). These margins are based on guidance found in Chapter 2 of the Considerations for Power Plant and Transmission System Protection Coordination technical reference document.

Option 6 calculates the generator bus voltage corresponding to 1.0 per unit nominal voltage on the high-side terminals of the GSU transformer. The generator bus voltage is calculated by multiplying the 1.0 per unit nominal voltage, at the high-side terminals of the GSU transformer, by the GSU transformer turns ratio (excluding the impedance). This is a simple calculation that approximates the stressed system conditions.

For Option 6, the voltage control setting shall be set less than 75 percent of the calculated generator bus voltage. The voltage setting must be set such that the function (e.g., 51V-C) will not trip under extreme emergency conditions as the time overcurrent function will be set less than generator full load current. Relays enabled as a function of voltage are indifferent as to the current setting, and this option simply requires that the relays not respond for the depressed voltage.

Generator Step-up Transformer (Synchronous Generators) Phase Distance Relays – Directional Toward Transmission System (e.g., 21) (Options 7a, 7b, and 7c)

The Federal Energy Regulatory Commission, in FERC Order No. 733, paragraph 104, directs that NERC address relay loadability for protective relays applied on GSU transformers. These margins are based on guidance found in Chapter 2 of the Considerations for Power Plant and Transmission System Protection Coordination technical reference document.

Table 1, Options 7a, 7b, and 7c, are provided for assessing loadability of phase distance relays that are directional toward the Transmission system and connected to the generator-side of the GSU transformer of a synchronous generator. For applications where the relay is connected on the high-side of the GSU transformer, use Option 14.
Option 7a calculates a generator bus voltage corresponding to 0.95 per unit nominal voltage on the high-side terminals of the GSU transformer. The generator bus voltage is calculated by multiplying the 0.95 per unit nominal voltage, at the high-side terminals of the GSU transformer, by the GSU transformer turns ratio (excluding the impedance). This calculation is a straightforward way to approximate the stressed system conditions.

Option 7b calculates the generator bus voltage corresponding to 0.85 per unit nominal voltage on the high-side terminals of the GSU transformer. The voltage drop across the GSU transformer is calculated based on the 0.85 per unit nominal voltage, at the high-side terminals of the GSU transformer, as well as the turns ratio and impedance. The actual generator bus voltage may be higher depending on the GSU transformer impedance and the actual Reactive Power achieved. This calculation is a more in-depth and precise method for setting the impedance element than Option 7a.

Option 7c simulates the generator bus voltage coincident with the highest Reactive Power output achieved during field-forcing. This output is in response to a 0.85 per unit nominal voltage on the high-side terminals of the GSU transformer prior to field-forcing. Using simulation is a more in-depth and precise method for setting the impedance element than Options 7a or 7b.

For Options 7a and 7b, the impedance element shall be set less than the calculated impedance derived from 115 percent of both: the Real Power output of 100 percent of the aggregate generation MW capability reported to the Transmission Planner, and the Reactive Power output that equates to 150 percent of the aggregate generation MW value (derived from the generator nameplate MVA rating at rated power factor).

For Option 7c, the impedance element shall be set less than the calculated impedance derived from 115 percent of both: the Real Power output of 100 percent of the aggregate generation MW capability reported to the Transmission Planner, and the Reactive Power output that equates to 100 percent of the maximum gross Mvar output during field-forcing as determined by simulation.

Generator Step-up Transformer (Synchronous Generators) Phase Overcurrent Relay (e.g., 50 or 51) (Options 8a, 8b and 8c)

The Federal Energy Regulatory Commission, in FERC Order No. 733, paragraph 104, directs that NERC address relay loadability for protective relays applied on GSU transformers. Note that the setting criteria established within the Table 1 options differ from Chapter 2 of the Considerations for Power Plant and Transmission System Protection Coordination technical reference document. Rather than establishing a uniform loadability threshold of 200 percent of

the generator nameplate MVA rating at rated power factor for all applications, the setting criteria are based on the maximum expected generator output.

Table 1, Options 8a, 8b, and 8c, are provided for assessing loadability of phase overcurrent relays that are connected to the generator-side of the GSU transformer of a synchronous generator. For applications where the relay is connected on the high-side of the GSU transformer, use Option 15.

Option 8a calculates a generator bus voltage corresponding to 0.95 per unit nominal voltage on the high-side terminals of the GSU transformer. The generator bus voltage is calculated by multiplying the 0.95 per unit nominal voltage, at the high-side terminals of the GSU transformer, by the GSU transformer turns ratio (excluding the impedance). This calculation is a straightforward way to approximate the stressed system conditions.

Option 8b calculates the generator bus voltage corresponding to 0.85 per unit nominal voltage on the high-side terminals of the GSU transformer. The voltage drop across the GSU transformer is calculated based on the 0.85 per unit nominal voltage, at the high-side terminals of the GSU transformer, as well as the turns ratio and impedance. The actual generator bus voltage may be higher depending on the GSU transformer impedance and the actual Reactive Power achieved. This calculation is a more in-depth and precise method for setting the overcurrent element than Option 8a.

Option 8c simulates the generator bus voltage coincident with the highest Reactive Power output achieved during field-forcing. This output is in response to a 0.85 per unit nominal voltage on the high-side terminals of the GSU transformer prior to field-forcing. Using simulation is a more in-depth and precise method for setting the overcurrent element than Options 8a or 8b.

For Options 8a and 8b, the overcurrent element shall be set greater than 115 percent of the calculated current derived from both: the Real Power output of 100 percent of the aggregate generation MW capability reported to the Transmission Planner, and the Reactive Power output that equates to 150 percent of the aggregate generation MW value (derived from the generator nameplate MVA rating at rated power factor).

For Option 8c, the overcurrent element shall be set greater than 115 percent of the calculated current derived from both: the Real Power output of 100 percent of the aggregate generation MW capability reported to the Transmission Planner, and the Reactive Power output that equates to 100 percent of the maximum gross Mvar output during field-forcing as determined by simulation.

Generator Step-up Transformer (Synchronous Generators) Phase Directional Overcurrent Relay – Directional Toward Transmission System (e.g., 67) (Options 9a, 9b and 9c)

The Federal Energy Regulatory Commission, in FERC Order No. 733, paragraph 104, directs that NERC address relay loadability for protective relays applied on GSU transformers. Note that the setting criteria established within the Table 1 options differ from Chapter 2 of the Considerations for Power Plant and Transmission System Protection Coordination technical reference document. Rather than establishing a uniform loadability threshold of 200 percent of the generator nameplate MVA rating at rated power factor for all applications, the setting criteria are based on the maximum expected generator output.

Table 1, Options 9a, 9b, and 9c, are provided for assessing loadability of phase directional overcurrent relays directional toward the Transmission System that are connected to the generator-side of the GSU transformer of a synchronous generator. For applications where the relay is connected on the high-side of the GSU transformer, use Option 16.

Option 9a calculates a generator bus voltage corresponding to 0.95 per unit nominal voltage on the high-side terminals of the GSU transformer. The generator bus voltage is calculated by multiplying the 0.95 per unit nominal voltage, at the high-side terminals of the GSU transformer, by the GSU transformer turns ratio (excluding the impedance). This calculation is a straightforward way to approximate the stressed system conditions.

Option 9b calculates the generator bus voltage corresponding to 0.85 per unit nominal voltage on the high-side terminals of the GSU transformer. The voltage drop across the GSU transformer is calculated based on the 0.85 per unit nominal voltage, at the high-side terminals of the GSU transformer, as well as the turns ratio and impedance. The actual generator bus voltage may be higher depending on the GSU transformer impedance and the actual Reactive Power achieved. This calculation is a more in-depth and precise method for setting the overcurrent element than Option 9a.

Option 9c simulates the generator bus voltage coincident with the highest Reactive Power output achieved during field-forcing. This output is in response to a 0.85 per unit nominal voltage on the high-side terminals of the GSU transformer prior to field-forcing. Using simulation is a more in-depth and precise method for setting the overcurrent element than Options 9a or 9b.

For Options 9a and 9b, the overcurrent element shall be set greater than 115 percent of the calculated current derived from both: the Real Power output of 100 percent of the aggregate generation MW capability reported to the Transmission Planner, and the Reactive Power output that equates to 150 percent of the aggregate generation MW value (derived from the generator nameplate MVA rating at rated power factor).

For Option 9c, the overcurrent element shall be set greater than 115 percent of the calculated current derived from both: the Real Power output of 100 percent of the aggregate generation MW capability reported to the Transmission Planner, and the Reactive Power output that

equates to 100 percent of the maximum gross Mvar output during field-forcing as determined by simulation.

Generator Step-up Transformer (Asynchronous Generators) Phase Distance Relay – Directional Toward Transmission System (e.g., 21) (Option 10)

The Federal Energy Regulatory Commission, in FERC Order No. 733, paragraph 104, directs that NERC address relay loadability for protective relays applied on GSU transformers. Table 1, Option 10 is provided for assessing loadability for GSU transformers applying phase distance relays that are directional toward the Transmission System that are connected to the generator-side of the GSU transformer of an asynchronous generator. These margins are based on guidance found in Chapter 2 of the Considerations for Power Plant and Transmission System Protection Coordination technical reference document. For applications where the relay is connected on the high-side of the GSU transformer, use Option 17.

Option 10 calculates the generator bus voltage corresponding to 1.0 per unit nominal voltage on the high-side terminals of the GSU transformer. The generator bus voltage is calculated by multiplying the 1.0 per unit nominal voltage, at the high-side terminals of the GSU transformer, by the GSU transformer turns ratio (excluding the impedance). This calculation is a straightforward way to approximate the stressed system conditions.

Since the relay voltage is supplied from the generator bus, it is necessary to assess loadability using the generator-side voltage. Asynchronous generators do not produce as much Reactive Power as synchronous generators; hence the voltage drop due to Reactive Power flow through the GSU transformer is not as significant. Therefore, the generator bus voltage can be conservatively estimated by reflecting the high-side nominal voltage to the generator-side based on the GSU transformer's turns ratio.

For Option 10, the impedance element shall be set less than the calculated impedance, derived from 130 percent of the maximum aggregate nameplate MVA output at rated power factor, including the Mvar output of any static or dynamic Reactive Power devices. This is determined by summing the total MW and Mvar capability of the generation equipment behind the relay and any static or dynamic Reactive Power devices that contribute to the power flow through the relay.

Generator Step-up Transformer (Asynchronous Generators) Phase Overcurrent Relay (e.g., 50 or 51) (Option 11)

The Federal Energy Regulatory Commission, in FERC Order No. 733, paragraph 104, directs that NERC address relay loadability for protective relays applied on GSU transformers. Note that the setting criteria established within the Table 1 options differ from Chapter 2 of the Considerations for Power Plant and Transmission System Protection Coordination technical reference document. Rather than establishing a uniform loadability threshold of 200 percent of the generator nameplate MVA rating at rated power factor for all applications, the setting criteria are based on the maximum expected generator output.

Table 1, Option 11 is provided for assessing loadability of phase overcurrent relays that are connected to the generator-side of the GSU transformer of an asynchronous generator. For applications where the relay is connected on the high-side of the GSU transformer, use Option 18.

Option 11 calculates the generator bus voltage corresponding to 1.0 per unit nominal voltage on the high-side terminals of the GSU transformer. The generator bus voltage is calculated by multiplying the 1.0 per unit nominal voltage, at the high-side terminals of the GSU transformer, by the GSU transformer turns ratio (excluding the impedance). This calculation is a straightforward way to approximate the stressed system conditions.

Since the relay current is supplied from the generator bus, it is necessary to assess loadability using the generator-side voltage. Asynchronous generators do not produce as much Reactive Power as synchronous generators; hence the voltage drop due to Reactive Power flow through the GSU transformer is not as significant. Therefore, the generator bus voltage can be conservatively estimated by reflecting the high-side nominal voltage to the generator-side based on the GSU transformer's turns ratio.

For Option 11, the overcurrent element shall be set greater than 130 percent of the calculated current derived from the maximum aggregate nameplate MVA output at rated power factor, including the Mvar output of any static or dynamic Reactive Power devices. This is determined by summing the total MW and Mvar capability of the generation equipment behind the relay and any static or dynamic Reactive Power devices that contribute to the power flow through the relay.

Generator Step-up Transformer (Asynchronous Generators) Phase Directional Overcurrent Relay – Directional Toward Transmission System (e.g., 67) (Option 12)

The Federal Energy Regulatory Commission, in FERC Order No. 733, paragraph 104, directs that NERC address relay loadability for protective relays applied on GSU transformers. Note that the setting criteria established within the Table 1 options differ from Chapter 2 of the Considerations for Power Plant and Transmission System Protection Coordination technical reference document. Rather than establishing a uniform loadability threshold of 200 percent of the generator nameplate MVA rating at rated power factor for all applications, the setting criteria are based on the maximum expected generator output.

Table 1, Option 12 is provided for assessing loadability of phase directional overcurrent relays directional toward the Transmission System that are connected to the generator-side of the GSU transformer of an asynchronous generator. For applications where the relay is connected on the high-side of the GSU transformer, use Option 19.

Option 12 calculates the generator bus voltage corresponding to 1.0 per unit nominal voltage on the high-side terminals of the GSU transformer. The generator bus voltage is calculated by multiplying the 1.0 per unit nominal voltage, at the high-side terminals of the GSU transformer,

by the GSU transformer turns ratio (excluding the impedance). This calculation is a straightforward way to approximate the stressed system conditions.

Since the relay current is supplied from the generator bus, it is necessary to assess loadability using the generator-side voltage. Asynchronous generators do not produce as much Reactive Power as synchronous generators; hence the voltage drop due to Reactive Power flow through the GSU transformer is not as significant. Therefore, the generator bus voltage can be conservatively estimated by reflecting the high-side nominal voltage to the generator-side based on the GSU transformer's turns ratio.

For Option 12, the overcurrent element shall be set greater than 130 percent of the calculated current derived from the maximum aggregate nameplate MVA output at rated power factor, including the Mvar output of any static or dynamic Reactive Power devices. This is determined by summing the total MW and Mvar capability of the generation equipment behind the relay and any static or dynamic Reactive Power devices that contribute to the power flow through the relay.

Unit Auxiliary Transformers Phase Overcurrent Relay (e.g., 50 or 51) (Options 13a and 13b)

In FERC Order No. 733, paragraph 104, directs NERC to include in this standard a loadability requirement for relays used for overload protection of the UAT that supply normal station service for a generating unit. For the purposes of this standard, UATs provide the overall station power to support the unit at its maximum gross operation.

Table 1, Options 13a and 13b provide two options for addressing phase overcurrent relaying applied at the high-side of UATs. The transformer high-side winding may be directly connected to the transmission grid or at the generator isolated phase bus (IPB) or iso-phase bus. Phase overcurrent relays applied at the high-side of the UAT that remove the transformer from service resulting in an immediate (e.g., via lockout or auxiliary tripping relay operation) or consequential trip of the associated generator are to be compliant with the relay setting criteria in this standard. Due to the complexity of the application of low-side overload relays for single or multi-winding transformers, phase overcurrent relaying applied at the low-side of the UAT are not addressed in this standard. The NERC System Protection and Control Subcommittee addressed low-side UAT protection in the document called "Unit Auxiliary Transformer Overcurrent Relay Loadability During a Transmission Depressed Voltage Condition, March 2016." These relays include, but are not limited to, a relay used for arc flash protection, feeder protection relays, breaker failure, and relays whose operation may result in a generator runback.

Refer to the Figures 7 and 8 below for example configurations:

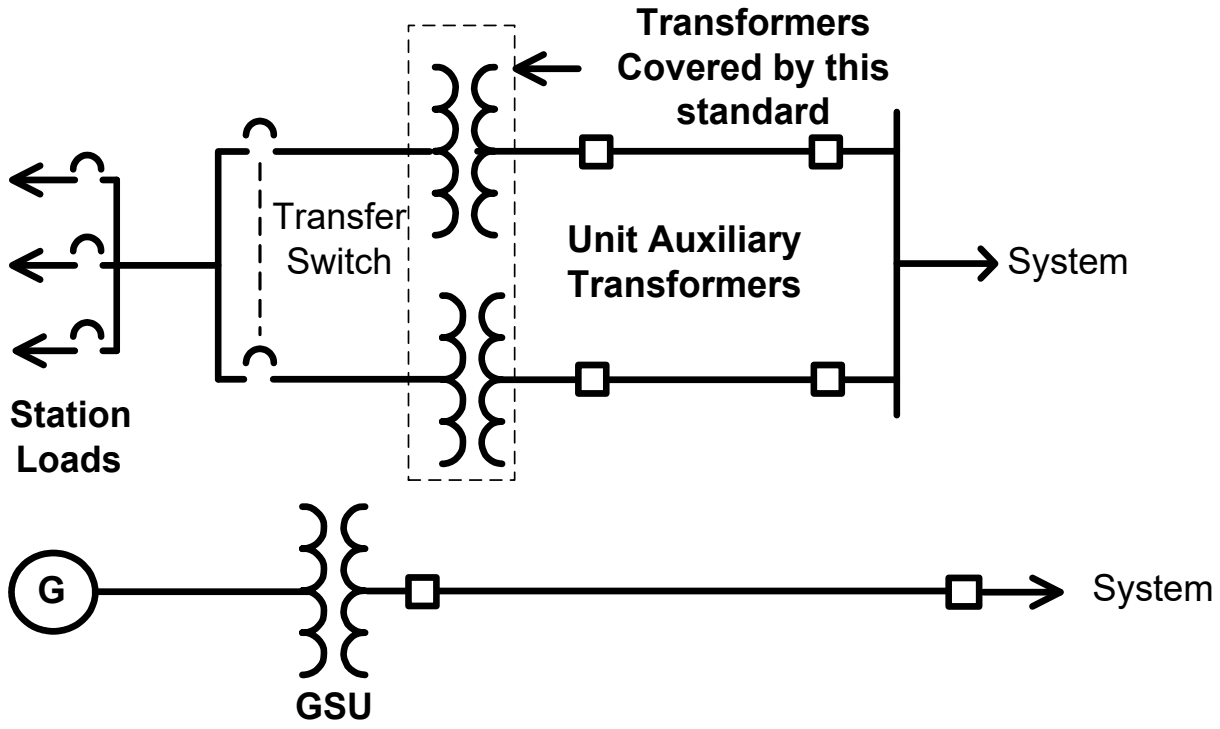

Figure 7: Auxiliary Power System (independent from generator)

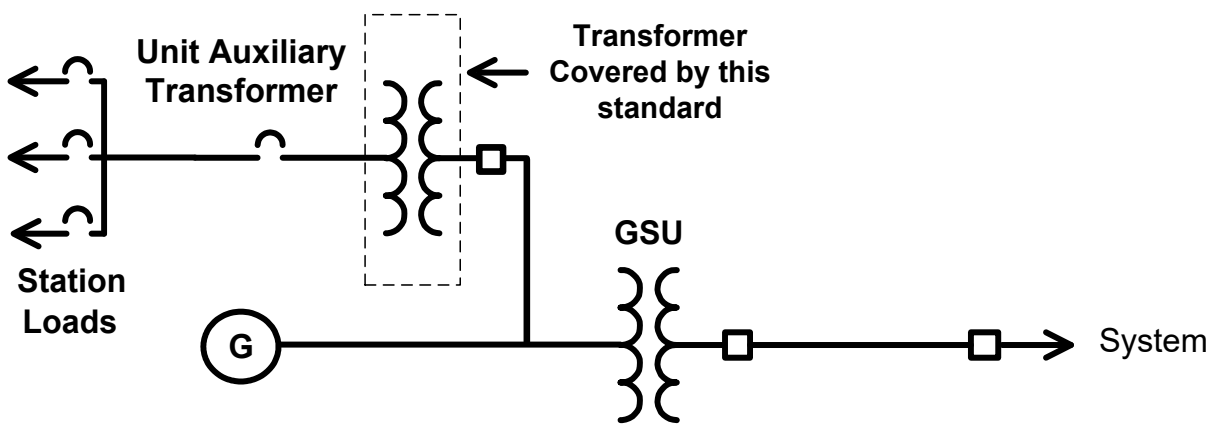

Figure 8: Typical auxiliary power system for generation units or plants

The UATs supplying power to the unit or plant electrical auxiliaries are sized to accommodate the maximum expected overall UAT load demand at the highest generator output. Although the transformer nameplate MVA size normally includes capacity for future loads as well as capacity

for starting of large induction motors on the original unit or plant design, the nameplate MVA capacity of the transformer may be near full load.

Because of the various design and loading characteristics of UATs, two options (i.e., 13a and 13b) are provided to accommodate an entity's protection philosophy while preventing the UAT transformer phase overcurrent relays from operating during the dynamic conditions anticipated by this standard.

Options 13a and 13b are based on the transformer bus voltage corresponding to 1.0 per unit nominal voltage on the high-side winding of the UAT.

For Option 13a, the overcurrent element shall be set greater than 150 percent of the calculated current derived from the UAT maximum nameplate MVA rating. This is a simple calculation that approximates the stressed system conditions.

For Option 13b, the overcurrent element shall be set greater than 150 percent of the UAT measured current at the generator maximum gross MW capability reported to the Transmission Planner. This allows for a reduced setting compared to Option 13a and the relay setting philosophy of the applicable entity. This is a more involved calculation that approximates the stressed system conditions by allowing the entity to consider the actual load placed on the UAT based on the generator's maximum gross MW capability reported to the Transmission Planner.

The performance of the UAT loads during stressed system conditions (i.e., depressed voltages) is very difficult to determine. Rather than requiring responsible entities to determine the response of UAT loads to depressed voltage, the technical experts writing the standard elected to increase the margin to 150 percent from that used elsewhere in this standard (e.g., 115 percent) and use a generator bus voltage of 1.0 per unit. A minimum setting current based on 150 percent of maximum transformer nameplate MVA rating at 1.0 per unit generator bus voltage will provide adequate transformer protection based on IEEE C37.91 at full load conditions while providing sufficient relay loadability to prevent a trip of the UAT, and subsequent unit trip, due to increased UAT load current during stressed system voltage conditions. Even if the UAT is equipped with an automatic tap changer, the tap changer may not respond quickly enough for the conditions anticipated within this standard, and thus shall not be used to reduce this margin.

Elements that connect a GSU transformer to the Transmission system that are used exclusively to export energy directly from a BES generating unit or generating plant (Synchronous Generators) Phase Distance Relays – Directional Toward Transmission System (e.g., 21) (Options 14a and 14b)

Relays applied on Elements that connect a GSU transformer to the Transmission system that are used exclusively to export energy directly from a BES generating unit or generating plant are challenged by loading conditions similar to relays applied on generators and GSU transformers. These margins are based on guidance found in Chapter 2 of the Considerations for Power Plant and Transmission System Protection Coordination technical reference document. Relays

applied on the high-side of the GSU transformer respond to the same quantities as the relays applied at the remote end of the line for Elements that connect a GSU transformer to the Transmission system that are used exclusively to export energy directly from a BES generating unit or generating plant, thus Option 14 is used for these relays as well.

Table 1, Options 14a and 14b, establish criteria for phase distance relays directional toward the Transmission system to prevent Elements that connect a GSU transformer to the Transmission system that are used exclusively to export energy directly from a BES generating unit or generating plant from tripping during the dynamic conditions anticipated by this standard. The stressed system conditions, anticipated by Option 14a reflects a 0.85 per unit of the line nominal voltage; therefore, establishing that the impedance value used for applying the Elements that connect a GSU transformer to the Transmission system that are used exclusively to export energy directly from a BES generating unit or generating plant phase distance relays that are directional toward the Transmission system be calculated from the apparent power addressed within the criteria, with application of a 0.85 per unit of the line nominal voltage at the relay location. Consideration of the voltage drop across the GSU transformer is not necessary. Option 14b simulates the line voltage coincident with the highest Reactive Power output achieved during field-forcing in response to a 0.85 per unit line nominal voltage at the remote end of the line prior to field-forcing. Using a 0.85 per unit line nominal voltage at the remote end of the line is representative of the lowest voltage expected during a depressed voltage condition on Elements that are used exclusively to export energy directly from a BES generating unit or generating plant to the Transmission system. Using simulation is a more involved, more precise setting of the overcurrent element overall.

For Option 14a, the impedance element shall be set less than the calculated impedance derived from 115 percent of both: the Real Power output of 100 percent of the aggregate generation MW capability reported to the Transmission Planner, and the Reactive Power output that equates to 120 percent of the aggregate generation MW value, derived from the generator nameplate MVA rating at rated power factor. This Reactive Power value differs from the 150 percent multiplier used in other applications to account for the Reactive Power losses in the GSU transformer. This is a simple calculation that approximates the stressed system conditions.

For Option 14b, the impedance element shall be set less than the calculated impedance derived from 115 percent of both: the Real Power output of 100 percent of the aggregate generation MW capability reported to the Transmission Planner, and the Reactive Power output that equates to 100 percent of the maximum gross Mvar output during field-forcing as determined by simulation. Option 14b uses the simulated line voltage at the relay location coincident with the highest Reactive Power output achieved during field-forcing in response to a 0.85 per unit of the line nominal voltage at the remote end of the line prior to field-forcing. Using simulation is a more involved, more precise setting of the impedance element overall.

Elements that connect a GSU transformer to the Transmission system that are used exclusively to export energy directly from a BES generating unit or generating plant (Synchronous Generators) Phase Time Overcurrent Relay (e.g., 50 or 51) (Options 15a and 15b)

Relays applied on Elements that connect a GSU transformer to the Transmission system that are used exclusively to export energy directly from a BES generating unit or generating plant are challenged by loading conditions similar to relays applied on generators and GSU transformers. Note that the setting criteria established within the Table 1 options differ from Chapter 2 of the Considerations for Power Plant and Transmission System Protection Coordination technical reference document. Rather than establishing a uniform setting threshold of 200 percent of the generator nameplate MVA rating at rated power factor for all applications, the setting criteria are based on the maximum expected generator output. Relays applied on the high-side of the GSU transformer respond to the same quantities as the relays applied at the remote end of the line for Elements that connect a GSU transformer to the Transmission system that are used exclusively to export energy directly from a BES generating unit or generating plant, thus Option 15 is used for these relays as well.

Table 1, Options 15a and 15b, establish criteria for phase instantaneous and/or time overcurrent relays to prevent Elements that connect a GSU transformer to the Transmission system that are used exclusively to export energy directly from a BES generating unit or generating plant from tripping during the dynamic conditions anticipated by this standard. The stressed system conditions, anticipated by Option 15a reflects a 0.85 per unit of the line nominal voltage at the relay location; therefore, establishing that the current value used for applying the Elements that connect a GSU transformer to the Transmission system that are used exclusively to export energy directly from a BES generating unit or generating plant phase instantaneous and/or time overcurrent relays be calculated from the apparent power addressed within the criteria, with application of a 0.85 per unit of the line nominal voltage at the relay location. Consideration of the voltage drop across the GSU transformer is not necessary. Option 15b simulates the line voltage coincident with the highest Reactive Power output achieved during field-forcing in response to a 0.85 per unit line nominal voltage at the remote end of the line prior to field-forcing. Using a 0.85 per unit line nominal voltage at the remote end of the line is representative of the lowest voltage expected during a depressed voltage condition on Elements that are used exclusively to export energy directly from a BES generating unit or generating plant to the Transmission system. Using simulation is a more involved, more precise setting of the overcurrent element overall.

For Option 15a, the overcurrent element shall be set greater than 115 percent of the calculated current derived from both: the Real Power output of 100 percent of the aggregate generation MW capability reported to the Transmission Planner, and the Reactive Power output that equates to 120 percent of the aggregate generation MW value, derived from the generator nameplate MVA rating at rated power factor. This Reactive Power value differs from the 150 percent multiplier used in other applications to account for the Reactive Power losses in the GSU transformer. This is a simple calculation that approximates the stressed system conditions.

For Option 15b, the overcurrent element shall be set greater than 115 percent of the calculated current derived from both: the Real Power output of 100 percent of the aggregate generation MW capability reported to the Transmission Planner, and the Reactive Power output that equates to 100 percent of the maximum gross Mvar output during field-forcing as determined by simulation. Option 15b uses the simulated line voltage at the relay location coincident with the highest Reactive Power output achieved during field-forcing in response to a 0.85 per unit of the line nominal voltage at the remote end of the line prior to field-forcing. Using simulation is a more involved, more precise setting of the overcurrent element overall.

Elements that connect a GSU transformer to the Transmission system that are used exclusively to export energy directly from a BES generating unit or generating plant (Synchronous Generators) Phase Directional Overcurrent Relay – Directional Toward Transmission System (e.g., 67) (Options 16a and 16b)

Relays applied on Elements that connect a GSU transformer to the Transmission system that are used exclusively to export energy directly from a BES generating unit or generating plant are challenged by loading conditions similar to relays applied on generators and GSU transformers. Note that the setting criteria established within the Table 1 options differ from Chapter 2 of the Considerations for Power Plant and Transmission System Protection Coordination technical reference document. Rather than establishing a uniform setting threshold of 200 percent of the generator nameplate MVA rating at rated power factor for all applications, the setting criteria are based on the maximum expected generator output. Relays applied on the high-side of the GSU transformer respond to the same quantities as the relays applied at the remote end of the line for Elements that connect a GSU transformer to the Transmission system that are used exclusively to export energy directly from a BES generating unit or generating plant, thus Option 16 is used for these relays as well.

Table 1, Options 16a and 16b, establish criteria for phase directional overcurrent relays that are directional toward the Transmission system to prevent Elements that connect a GSU transformer to the Transmission system that are used exclusively to export energy directly from a BES generating unit or generating plant from tripping during the dynamic conditions anticipated by this standard. The stressed system conditions, anticipated by Option 16a reflects a 0.85 per unit of the line nominal voltage at the relay location; therefore, establishing that the current value used for applying the interconnection Facilities phase directional overcurrent relays be calculated from the apparent power addressed within the criteria, with application of a 0.85 per unit of the line nominal voltage at the relay location. Consideration of the voltage drop across the GSU transformer is not necessary. Option 16b simulates the line voltage coincident with the highest Reactive Power output achieved during field-forcing in response to a 0.85 per unit line nominal voltage at the remote end of the line prior to field-forcing. Using a 0.85 per unit line nominal voltage at the remote end of the line is representative of the lowest voltage expected during a depressed voltage condition on Elements that are used exclusively to export energy directly from a BES generating unit or generating plant to the Transmission system. Using simulation is a more involved, more precise setting of the overcurrent element overall.

For Option 16a, the overcurrent element shall be set greater than 115 percent of the calculated current derived from both: the Real Power output of 100 percent of the aggregate generation MW capability reported to the Transmission Planner, and the Reactive Power output that equates to 120 percent of the aggregate generation MW value, derived from the generator nameplate MVA rating at rated power factor. This Reactive Power value differs from the 150 percent multiplier used in other applications to account for the Reactive Power losses in the GSU transformer. This is a simple calculation that approximates the stressed system conditions.

For Option 16b, the overcurrent element shall be set greater than 115 percent of the calculated current derived from both: the Real Power output of 100 percent of the aggregate generation MW capability reported to the Transmission Planner, and the Reactive Power output that equates to 100 percent of the maximum gross Mvar output during field-forcing as determined by simulation. Option 16b uses the simulated line voltage at the relay location coincident with the highest Reactive Power output achieved during field-forcing in response to a 0.85 per unit of the line nominal voltage at the remote end of the line prior to field-forcing. Using simulation is a more involved, more precise setting of the overcurrent element overall.

Elements that connect a GSU transformer to the Transmission system that are used exclusively to export energy directly from a BES generating unit or generating plant (Asynchronous Generators) Phase Distance Relay – Directional Toward Transmission System (e.g., 21) (Option 17)

Relays installed on the high-side of the GSU transformer, including relays installed on the remote end of the line, for Elements that connect a GSU transformer to the Transmission system that are used exclusively to export energy directly from a BES generating unit or generating plant are challenged by loading conditions similar to relays applied on generators and GSU transformers. These margins are based on guidance found in Chapter 2 of the Considerations for Power Plant and Transmission System Protection Coordination technical reference document.

Table 1, Option 17 establishes criteria for phase distance relays that are directional toward the Transmission system to prevent Elements that connect a GSU transformer to the Transmission system that are used exclusively to export energy directly from a BES generating unit or generating plant from tripping during the dynamic conditions anticipated by this standard. Option 17 applies a 1.0 per unit line nominal voltage at the relay location to calculate the impedance from the maximum aggregate nameplate MVA.

For Option 17, the impedance element shall be set less than the calculated impedance derived from 130 percent of the maximum aggregate nameplate MVA output at rated power factor including the Mvar output of any static or dynamic Reactive Power devices. This is determined by summing the total MW and Mvar capability of the generation equipment behind the relay and any static or dynamic Reactive Power devices that contribute to the power flow through the relay. This is a simple calculation that approximates the stressed system conditions.

Elements that connect a GSU transformer to the Transmission system that are used exclusively to export energy directly from a BES generating unit or generating plant (Asynchronous Generators) Phase Overcurrent Relay (e.g., 50 and 51) (Option 18)

Relays installed on the high-side of the GSU transformer, including relays installed on the remote end of the line, for Elements that connect a GSU transformer to the Transmission system that are used exclusively to export energy directly from a BES generating unit or generating plant are challenged by loading conditions similar to relays applied on generators and GSU transformers. Note that the setting criteria established within the Table 1 options differ from Chapter 2 of the Considerations for Power Plant and Transmission System Protection Coordination technical reference document. Rather than establishing a uniform setting threshold of 200 percent of the generator nameplate MVA rating at rated power factor for all applications, the setting criteria are based on the maximum expected generator output.

Table 1, Option 18 establishes criteria for phase overcurrent relays to prevent Elements that connect a GSU transformer to the Transmission system that are used exclusively to export energy directly from a BES generating unit or generating plant from tripping during the dynamic conditions anticipated by this standard. Option 18 applies a 1.0 per unit line nominal voltage at the location of the relay to calculate the current from the maximum aggregate nameplate MVA.

For Option 18, the overcurrent element shall be set greater than 130 percent of the calculated current derived from the maximum aggregate nameplate MVA output at rated power factor including the Mvar output of any static or dynamic Reactive Power devices. This is determined by summing the total MW and Mvar capability of the generation equipment behind the relay and any static or dynamic Reactive Power devices that contribute to the power flow through the relay. This is a simple calculation that approximates the stressed system conditions.

Elements that connect a GSU transformer to the Transmission system that are used exclusively to export energy directly from a BES generating unit or generating plant (Asynchronous Generators) Phase Directional Overcurrent Relay – Directional Toward Transmission System (e.g., 67) (Option 19)

Relays installed on the high-side of the GSU transformer, including relays installed on the remote end of the line, for Elements that connect a GSU transformer to the Transmission system that are used exclusively to export energy directly from a BES generating unit or generating plant are challenged by loading conditions similar to relays applied on generators and GSU transformers. Note that the setting criteria established within the Table 1 options differ from Chapter 2 of the Considerations for Power Plant and Transmission System Protection Coordination technical reference document. Rather than establishing a uniform setting threshold of 200 percent of the generator nameplate MVA rating at rated power factor for all applications, the setting criteria are based on the maximum expected generator output.

Table 1, Option 19 establishes criteria for phase directional overcurrent relays that are directional toward the Transmission system to prevent Elements that connect a GSU transformer to the Transmission system that are used exclusively to export energy directly from a BES generating unit or generating plant from tripping during the dynamic conditions

anticipated by this standard. Option 19 applies a 1.0 per unit line nominal voltage at the relay location to calculate the current from the maximum aggregate nameplate MVA.

For Option 19, the overcurrent element shall be set greater than 130 percent of the calculated current derived from the maximum aggregate nameplate MVA output at rated power factor including the Mvar output of any static or dynamic Reactive Power devices. This is determined by summing the total MW and Mvar capability of the generation equipment behind the relay and any static or dynamic Reactive Power devices that contribute to the power flow through the relay. This is a simple calculation that approximates the stressed system conditions.

Example Calculations

Introduction

Example Calculations	
Input Descriptions	**Input Values**
Synchronous Generator nameplate (MVA @ rated pf):	$GEN_{Synch\_nameplate} = 903\ MVA$
	$pf = 0.85$
Generator rated voltage (Line-to-Line):	$V_{gen\_nom} = 22\ kV$
Real Power output in MW as reported to the TP:	$P_{Synch\_reported} = 700.0\ MW$
Generator step-up (GSU) transformer rating:	$MVA_{GSU} = 903\ MVA$
GSU transformer reactance (903 MVA base):	$X_{GSU} = 12.14\%$
GSU transformer MVA base:	$MVA_{base} = 767.6\ MVA$
GSU transformer turns ratio:	$GSU_{ratio} = \frac{22\ kV}{346.5\ kV}$
High-side nominal system voltage (Line-to-Line):	$V_{nom} = 345\ kV$
Current transformer (CT) ratio:	$CT_{ratio} = \frac{25000}{5}$
Potential transformer (PT) ratio low-side:	$PT_{ratio} = \frac{200}{1}$
PT ratio high-side:	$PT_{ratio\_hv} = \frac{2000}{1}$
Unit auxiliary transformer (UAT) nameplate:	$UAT_{nameplate} = 60\ MVA$
UAT high-side voltage:	$V_{UAT} = 13.8\ kV$
UAT CT ratio:	$CT_{UAT} = \frac{5000}{5}$
CT high voltage ratio:	$CT_{ratio\_hv} = \frac{2000}{5}$
Reactive Power output of static reactive device:	$MVAR_{static} = 15\ Mvar$

Example Calculations	
Reactive Power output of static reactive device generation:	$MVAR_{gen\_static} = 5\ Mvar$
Asynchronous generator nameplate (MVA @ rated pf):	$GEN_{Asynch\_nameplate} = 40\ MVA$
	$pf = 0.85$
Asynchronous CT ratio:	$CT_{Asynch\_ratio} = \frac{5000}{5}$
Asynchronous high voltage CT ratio:	$CT_{Asynch\_ratio\_hv} = \frac{300}{5}$
CT remote substation bus	$CT_{ratio\_remote\_bus} = \frac{2000}{5}$

Example Calculations: Option 1a

Option 1a represents the simplest calculation for synchronous generators applying a phase distance relay (e.g., 21) directional toward the Transmission system.

Real Power output (P):

Eq. (1) $P = GEN_{Synch\_nameplate} \times pf$

$P = 903\ MVA\ \times 0.85$

$P = 767.6\ MW$

Reactive Power output (Q):

Eq. (2) $Q = 150\% \times P$

$Q = 1.50 \times 767.6\ MW$

$Q = 1151.3\ Mvar$

Option 1a, Table 1 – Bus Voltage, calls for a 0.95 per unit of the high-side nominal voltage for the generator bus voltage (V_{gen}):

Eq. (3) $V_{gen} = 0.95\ p.u. \times V_{nom} \times GSU_{ratio}$

$V_{gen} = 0.95 \times 345\ kV \times \left(\frac{22\ kV}{346.5\ kV}\right)$

$V_{gen} = 20.81\ kV$

Apparent power (S):

Eq. (4) $S = P_{Synch\_reported} + jQ$

$S = 700.0\ MW + j1151.3\ Mvar$

$S = 1347.4\angle 58.7°\ MVA$

Primary impedance (Z_{pri}):

Eq. (5) $Z_{pri} = \frac{V_{gen}^2}{S^*}$

$Z_{pri} = \frac{(20.81\ kV)^2}{1347.4\angle -58.7°\ MVA}$

Example Calculations: Option 1a

$$Z_{pri} = 0.321\angle 58.7°\ \Omega$$

Secondary impedance (Z_{sec}):

Eq. (6) $$Z_{sec} = Z_{pri} \times \frac{CT_{ratio}}{PT_{ratio}}$$

$$Z_{sec} = 0.321\angle 58.7°\ \Omega \times \frac{\frac{25000}{5}}{\frac{200}{1}}$$

$$Z_{sec} = 0.321\angle 58.7°\ \Omega \times 25$$

$$Z_{sec} = 8.035\angle 58.7°\ \Omega$$

To satisfy the 115% margin in Option 1a:

Eq. (7) $$Z_{\sec limit} = \frac{Z_{sec}}{115\%}$$

$$Z_{\sec limit} = \frac{8.035\angle 58.7°\ \Omega}{1.15}$$

$$Z_{\sec limit} = 6.9873\angle 58.7°\ \Omega$$

$$\theta_{transient\ load\ angle} = 58.7°$$

Assume a Mho distance impedance relay with a maximum torque angle (MTA) set at 85°, then the maximum allowable impedance reach is:

Eq. (8) $$Z_{max} < \frac{|Z_{\sec limit}|}{\cos(\theta_{MTA} - \theta_{transient\ load\ angle})}$$

$$Z_{max} < \frac{6.9873\ \Omega}{\cos(85.0° - 58.7°)}$$

$$Z_{max} < \frac{6.9873\ \Omega}{0.896}$$

$$Z_{max} < 7.793\angle 85.0°\ \Omega$$

Example Calculations: Options 1b and 7b

Option 1b represents a more complex, more precise calculation for synchronous generators applying a phase distance relay (e.g., 21) directional toward the Transmission system. This option requires calculating low-side voltage taking into account voltage drop across the GSU transformer. Similarly these calculations may be applied to Option 7b for GSU transformers applying a phase distance relay (e.g., 21) directional toward the Transmission system.

Real Power output (P):

Eq. (9) $$P = GEN_{Synch\_nameplate} \times pf$$

$$P = 903\ MVA\ \times 0.85$$

$$P = 767.6\ MW$$

Reactive Power output (Q):

Eq. (10) $$Q = 150\% \times P$$

$$Q = 1.50 \times 767.6\ MW$$

$$Q = 1151.3\ Mvar$$

Convert Real Power, Reactive Power, and transformer reactance to per unit values on a 767.6 MVA base (MVA_{base}):

Real Power output (P):

Eq. (11) $$P_{pu} = \frac{P_{Synch\_reported}}{MVA_{base}}$$

$$P_{pu} = \frac{700.0\ MW}{767.6\ MVA}$$

$$P_{pu} = 0.91\ p.u.$$

Reactive Power output (Q):

Eq. (12) $$Q_{pu} = \frac{Q}{MVA_{base}}$$

$$Q_{pu} = \frac{1151.3\ Mvar}{767.6\ MVA}$$

$$Q_{pu} = 1.5\ p.u.$$

Example Calculations: Options 1b and 7b

Transformer impedance (X_{pu}):

Eq. (13) $$X_{pu} = X_{GSU(old)} \times \left(\frac{MVA_{base}}{MVA_{GSU}}\right)$$

$$X_{pu} = 12.14\% \times \left(\frac{767.6\ MVA}{903\ MVA}\right)$$

$$X_{pu} = 0.1032\ p.u.$$

Using the formula below; calculate the low-side GSU transformer voltage ($V_{low\text{-}side}$) using 0.85 p.u. high-side voltage ($V_{high\text{-}side}$). Assume initial low-side voltage to be 0.95 p.u. and repeat the calculation as necessary until $V_{low\text{-}side}$ converges. A convergence of less than one percent (<1%) between iterations is considered sufficient:

Eq. (14) $$\theta_{low-side} = \sin^{-1}\left[\frac{(P_{pu} \times |X_{pu}|)}{(|V_{low-side}| \times [V_{high-side}])}\right]$$

$$\theta_{low-side} = \sin^{-1}\left[\frac{(0.91 \times 0.1032)}{(0.95 \times 0.85)}\right]$$

$$\theta_{low-side} = 6.7°$$

Eq. (15)

$$|V_{low-side}| = \frac{|V_{high-side}| \times \cos(\theta_{low-side}) \pm \sqrt{|V_{high-side}|^2 \times \cos^2(\theta_{low-side}) + 4 \times Q_{pu} \times X_{pu}}}{2}$$

$$|V_{low-side}| = \frac{|0.85| \times \cos(6.7°) \pm \sqrt{|0.85|^2 \times \cos^2(6.7°) + 4 \times 1.5 \times 0.1032}}{2}$$

$$|V_{low-side}| = \frac{|0.85| \times 0.9931 \pm \sqrt{0.7225 \times 0.9864 + 0.6192}}{2}$$

$$|V_{low-side}| = \frac{0.8441 \pm 1.1541}{2}$$

$$|V_{low-side}| = 0.9991\ p.u.$$

Example Calculations: Options 1b and 7b

Use the new estimated $V_{low\text{-}side}$ value of 0.9991 per unit for the second iteration:

Eq. (16) $$\theta_{low-side} = \sin^{-1}\left[\frac{(P_{pu} \times |X_{pu}|)}{(|V_{low-side}| \times [V_{high-side}])}\right]$$

$$\theta_{low-side} = \sin^{-1}\left[\frac{(0.91 \times 0.1032)}{(0.9991 \times 0.85)}\right]$$

$$\theta_{low-side} = 6.3°$$

Eq. (17)

$$|V_{low-side}| = \frac{|V_{high-side}| \times \cos(\theta_{low-side}) \pm \sqrt{|V_{high-side}|^2 \times \cos^2(\theta_{low-side}) + 4 \times Q_{pu} \times X_{pu}}}{2}$$

$$|V_{low-side}| = \frac{|0.85| \times \cos(6.3°) \pm \sqrt{|0.85|^2 \times \cos^2(6.3°) + 4 \times 1.5 \times 0.1032}}{2}$$

$$|V_{low-side}| = \frac{|0.85| \times 0.9940 \pm \sqrt{0.7225 \times 0.9880 + 0.6192}}{2}$$

$$|V_{low-side}| = \frac{0.8449 \pm 1.1546}{2}$$

$$|V_{low-side}| = 0.9998\ p.u.$$

To account for system high-side nominal voltage and the transformer tap ratio:

Eq. (18) $$V_{bus} = |V_{low-side}| \times V_{nom} \times GSU_{ratio}$$

$$V_{bus} = 0.9998\ p.u. \times 345\ kV \times \left(\frac{22\ kV}{346.5\ kV}\right)$$

$$V_{bus} = 21.90\ kV$$

Apparent power (S):

Eq. (19) $$S = P_{Synch\_reported} + jQ$$

$$S = 700.0\ MW + j1151.3\ Mvar$$

$$S = 1347.4\angle 58.7°\ MVA$$

Example Calculations: Options 1b and 7b

Primary impedance (Z_{pri}):

Eq. (20) $$Z_{pri} = \frac{V_{bus}^2}{S^*}$$

$$Z_{pri} = \frac{(21.90\ kV)^2}{1347.4\angle -58.7°\ MVA}$$

$$Z_{pri} = 0.356\angle 58.7°\ \Omega$$

Secondary impedance (Z_{sec}):

Eq. (21) $$Z_{sec} = Z_{pri} \times \frac{CT_{ratio}}{PT_{ratio}}$$

$$Z_{sec} = 0.356\angle 58.7°\ \Omega \times \frac{\frac{25000}{5}}{\frac{200}{1}}$$

$$Z_{sec} = 0.356\angle 58.7°\ \Omega \times 25$$

$$Z_{sec} = 8.900\angle 58.7°\ \Omega$$

To satisfy the 115% margin in Options 1b and 7b:

Eq. (22) $$Z_{\sec limit} = \frac{Z_{sec}}{115\%}$$

$$Z_{\sec limit} = \frac{8.900\angle 58.7°\ \Omega}{1.15}$$

$$Z_{\sec limit} = 7.74\angle 58.7°\ \Omega$$

$$\theta_{transient\ load\ angle} = 58.7°$$

Assume a Mho distance impedance relay with a maximum torque angle (MTA) set at 85°, then the maximum allowable impedance reach is:

Eq. (23) $$Z_{max} < \frac{|Z_{\sec limit}|}{\cos(\theta_{MTA} - \theta_{transient\ load\ angle})}$$

$$Z_{max} < \frac{7.74\ \Omega}{\cos(85.0° - 58.7°)}$$

Example Calculations: Options 1b and 7b

$$Z_{max} < \frac{7.74\ \Omega}{0.8965}$$

$$Z_{max} < \ 8.633\angle 85.0°\ \Omega$$

Example Calculations: Options 1c and 7c

Option 1c represents a more involved, more precise setting of the impedance element. This option requires determining maximum generator Reactive Power output during field-forcing and the corresponding generator bus voltage. Once these values are determined, the remainder of the calculation is the same as Options 1a and 1b.

The generator Reactive Power and generator bus voltage are determined by simulation. The maximum Reactive Power output on the low-side of the GSU transformer during field-forcing is used as this value will correspond to the lowest apparent impedance. The corresponding generator bus voltage is also used in the calculation. Note that although the excitation limiter reduces the field, the duration of the Reactive Power output achieved for this condition is sufficient to operate a phase distance relay.

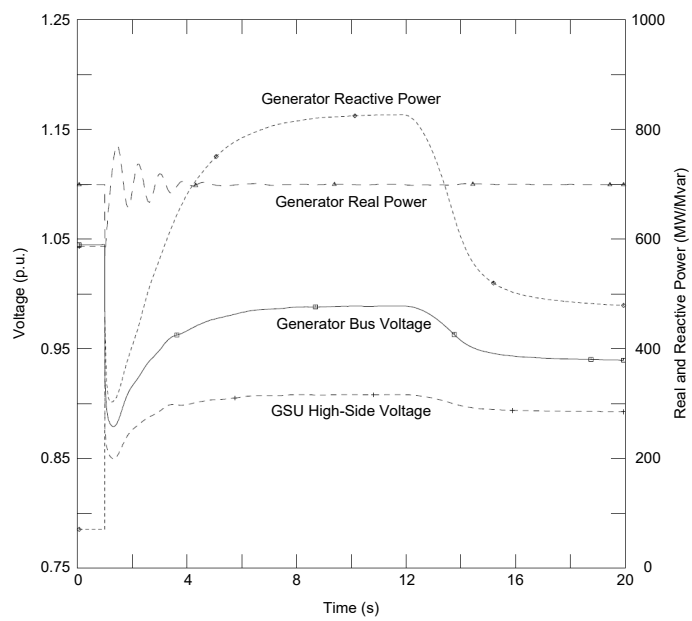

In this simulation the following values are derived:

$$Q = 827.4\ Mvar$$

$$V_{bus\_simulated} = 0.989 \times V_{gen\_nom} = 21.76\ kV$$

Example Calculations: Options 1c and 7c

The other value required is the Real Power output which is modeled in the simulation at 100% of the gross MW capability reported to the Transmission Planner. In this case:

$$P_{Synch\_reported} = 700.0\ MW$$

Apparent power (S):

Eq. (24) $$S = P_{Synch\_reported} + jQ$$

$$S = 700.0\ MW + j827.4\ Mvar$$

$$S = 1083.8\angle 49.8°\ MVA$$

Primary impedance (Z_{pri}):

Eq. (25) $$Z_{pri} = \frac{V_{bus\_simulated}^2}{S^*}$$

$$Z_{pri} = \frac{(21.76\ kV)^2}{1083.8\angle -49.8°\ MVA}$$

$$Z_{pri} = 0.437\angle 49.8°\ \Omega$$

Secondary impedance (Z_{sec}):

Eq. (26) $$Z_{sec} = Z_{pri} \times \frac{CT_{ratio}}{PT_{ratio}}$$

$$Z_{sec} = 0.437\angle 49.8°\ \Omega \times \frac{\frac{25000}{5}}{\frac{200}{1}}$$

$$Z_{sec} = 0.437\angle 49.8°\ \Omega \times 25$$

$$Z_{sec} = 10.92\angle 49.8°\ \Omega$$

To satisfy the 115% margin in the requirement in Options 1c and 7c:

Eq. (27) $$Z_{\sec limit} = \frac{Z_{sec}}{115\%}$$

$$Z_{\sec limit} = \frac{10.92\angle 49.8°\ \Omega}{1.15}$$

$$Z_{\sec limit} = 9.50\angle 49.8°\ \Omega$$

Example Calculations: Options 1c and 7c

$$\theta_{transient\ load\ angle} = 49.8°$$

Assume a Mho distance impedance relay with a maximum torque angle (MTA) set at 85°, then the maximum allowable impedance reach is:

Eq. (28) $$Z_{max} < \frac{|Z_{\sec limit}|}{\cos(\theta_{MTA} - \theta_{transient\ load\ angle})}$$

$$Z_{max} < \frac{9.50\ \Omega}{\cos(85.0° - 49.8°)}$$

$$Z_{max} < \frac{9.50\ \Omega}{0.8171}$$

$$Z_{max} < 11.63\angle 85.0°\ \Omega$$

Example Calculations: Option 2a

Option 2a represents the simplest calculation for synchronous generators applying a phase overcurrent (e.g., 50, 51, or 51V-R) relay:

Real Power output (P):

Eq. (29) $$P = GEN_{Synch\_nameplate} \times pf$$

$$P = 903\ MVA \times 0.85$$

$$P = 767.6\ MW$$

Reactive Power output (Q):

Eq. (30) $$Q = 150\% \times P$$

$$Q = 1.50 \times 767.6\ MW$$

$$Q = 1151.3\ Mvar$$

Option 2a, Table 1 – Bus Voltage, calls for a 0.95 per unit of the high-side nominal voltage for the generator bus voltage (V_{gen}):

Eq. (31) $$V_{gen} = 0.95\ p.u. \times V_{nom} \times GSU_{ratio}$$

Example Calculations: Option 2a

$$V_{gen} = 0.95 \times 345\ kV \times \left(\frac{22\ kV}{346.5\ kV}\right)$$

$$V_{gen} = 20.81\ kV$$

Apparent power (S):

Eq. (32) $$S = P_{Synch\_reported} + jQ$$

$$S = 700.0\ MW + j1151.3\ Mvar$$

$$S = 1347.4\angle 58.7°\ MVA$$

Primary current (I_{pri}):

Eq. (33) $$I_{pri} = \frac{S}{\sqrt{3} \times V_{gen}}$$

$$I_{pri} = \frac{1347.4\ MVA}{1.73 \times 20.81\ kV}$$

$$I_{pri} = 37383\ A$$

Secondary current (I_{sec}):

Eq. (34) $$I_{sec} = \frac{I_{pri}}{CT_{ratio}}$$

$$I_{sec} = \frac{37383\ A}{\frac{25000}{5}}$$

$$I_{sec} = 7.477\ A$$

To satisfy the 115% margin in Option 2a:

Eq. (35) $$I_{\sec limit} > I_{sec} \times 115\%$$

$$I_{\sec limit} > 7.477\ A \times 1.15$$

$$I_{\sec limit} > 8.598\ A$$

Example Calculations: Option 2b

Example Calculations: Option 2b

Option 2b represents a more complex calculation for synchronous generators applying a phase overcurrent (e.g., 50, 51, or 51V-R) relay:

Real Power output (P):

Eq. (36) $$P = GEN_{Synch\_nameplate} \times pf$$

$$P = 903\ MVA\ \times 0.85$$

$$P = 767.6\ MW$$

Reactive Power output (Q):

Eq. (37) $$Q = 150\% \times P$$

$$Q = 1.50 \times 767.6\ MW$$

$$Q = 1151.3\ Mvar$$

Convert Real Power, Reactive Power, and transformer reactance to per unit values on 767.6 MVA base (MVA_{base}).

Real Power output (P):

Eq. (38) $$P_{pu} = \frac{P_{Synch\_reported}}{MVA_{base}}$$

$$P_{pu} = \frac{700.0\ MW}{767.6\ MVA}$$

$$P_{pu} = 0.91\ p.u.$$

Reactive Power output (Q):

Eq. (39) $$Q_{pu} = \frac{Q}{MVA_{base}}$$

$$Q_{pu} = \frac{1151.3\ Mvar}{767.6\ MVA}$$

$$Q_{pu} = 1.5\ p.u.$$

Example Calculations: Option 2b

Transformer impedance:

Eq. (40) $$X_{pu} = X_{GSU(old)} \times \frac{MVA_{base}}{MVA_{GSU}}$$

$$X_{pu} = 12.14\% \times \left(\frac{767.6\ MVA}{903\ MVA}\right)$$

$$X_{pu} = 0.1032\ p.u.$$

Using the formula below; calculate the low-side GSU transformer voltage ($V_{low\text{-}side}$) using 0.85 p.u. high-side voltage ($V_{high\text{-}side}$). Assume initial low-side voltage to be 0.95 p.u. and repeat the calculation as necessary until $V_{low\text{-}side}$ converges. A convergence of less than one percent (<1%) between iterations is considered sufficient:

Eq. (41) $$\theta_{low-side} = \sin^{-1}\left[\frac{(P_{pu} \times |X_{pu}|)}{(|V_{low-side}| \times [V_{high-side}])}\right]$$

$$\theta_{low-side} = \sin^{-1}\left[\frac{(0.91 \times 0.1032)}{(0.95 \times 0.85)}\right]$$

$$\theta_{low-side} = 6.7°$$

Eq. (42)

$$|V_{low-side}| = \frac{|V_{high-side}| \times \cos(\theta_{low-side}) \pm \sqrt{|V_{high-side}|^2 \times \cos^2(\theta_{low-side}) + 4 \times Q_{pu} \times X_{pu}}}{2}$$

$$|V_{low-side}| = \frac{|0.85| \times \cos(6.7°) \pm \sqrt{|0.85|^2 \times \cos^2(6.7°) + 4 \times 1.5 \times 0.1032}}{2}$$

$$|V_{low-side}| = \frac{|0.85| \times 0.9931 \pm \sqrt{0.7225 \times 0.9864 + 0.6192}}{2}$$

$$|V_{low-side}| = \frac{0.8441 \pm 1.1541}{2}$$

$$|V_{low-side}| = 0.9991\ p.u.$$

Example Calculations: Option 2b

Use the new estimated $V_{low\text{-}side}$ value of 0.9991 per unit for the second iteration:

Eq. (43) $$\theta_{low-side} = \sin^{-1}\left[\frac{(P_{pu} \times |X_{pu}|)}{(|V_{low-side}| \times [V_{high-side}])}\right]$$

$$\theta_{low-side} = \sin^{-1}\left[\frac{(0.91 \times 0.1032)}{(0.9991 \times 0.85)}\right]$$

$$\theta_{low-side} = 6.3°$$

Eq. (44)

$$|V_{low-side}| = \frac{|V_{high-side}| \times \cos(\theta_{low-side}) \pm \sqrt{|V_{high-side}|^2 \times \cos^2(\theta_{low-side}) + 4 \times Q_{pu} \times X_{pu}}}{2}$$

$$|V_{low-side}| = \frac{|0.85| \times \cos(6.3°) \pm \sqrt{|0.85|^2 \times \cos^2(6.3°) + 4 \times 1.5 \times 0.1032}}{2}$$

$$|V_{low-side}| = \frac{|0.85| \times 0.9940 \pm \sqrt{0.7225 \times 0.9880 + 0.6192}}{2}$$

$$|V_{low-side}| = \frac{0.8449 \pm 1.1546}{2}$$

$$|V_{low-side}| = 0.9998\ p.u.$$

To account for system high-side nominal voltage and the transformer tap ratio:

Eq. (45) $$V_{bus} = |V_{low-side}| \times V_{nom} \times GSU_{ratio}$$

$$V_{bus} = 0.9998\ p.u. \times 345\ kV \times \left(\frac{22\ kV}{346.5\ kV}\right)$$

$$V_{bus} = 21.90\ kV$$

Apparent power (S):

Eq. (46) $$S = P_{Synch\_reported} + jQ$$

$$S = 700.0\ MW + j1151.3\ Mvar$$

$$S = 1347.4\angle 58.7°\ MVA$$

Example Calculations: Option 2b

Primary current (I_{pri}):

Eq. (47) $$I_{pri} = \frac{S}{\sqrt{3} \times V_{bus}}$$

$$I_{pri} = \frac{1347.4\ MVA}{1.73 \times 21.90\ kV}$$

$$I_{pri} = 35553\ A$$

Secondary current (I_{sec}):

Eq. (48) $$I_{sec} = \frac{I_{pri}}{CT_{ratio}}$$

$$I_{sec} = \frac{35553\ A}{\frac{25000}{5}}$$

$$I_{sec} = 7.111\ A$$

To satisfy the 115% margin in Option 2b:

Eq. (49) $$I_{\sec limit} > I_{sec} \times 115\%$$

$$I_{\sec limit} > 7.111\ A \times 1.15$$

$$I_{\sec limit} > 8.178\ A$$

Example Calculations: Option 2c

Option 2c represents a more involved, more precise setting of the overcurrent element for the phase overcurrent (e.g., 50, 51, or 51V-R) relay. This option requires determining maximum generator Reactive Power output during field-forcing and the corresponding generator bus voltage. Once these values are determined, the remainder of the calculation is the same as Options 2a and 2b.

The generator Reactive Power and generator bus voltage are determined by simulation. The maximum Reactive Power output on the low-side of the GSU transformer during field-forcing is used as this value will correspond to the highest current. The corresponding generator bus voltage is also used in the calculation. Note that although the excitation limiter reduces the field, the duration of the Reactive Power output achieved for this condition is sufficient to operate a voltage-restrained phase overcurrent relay.

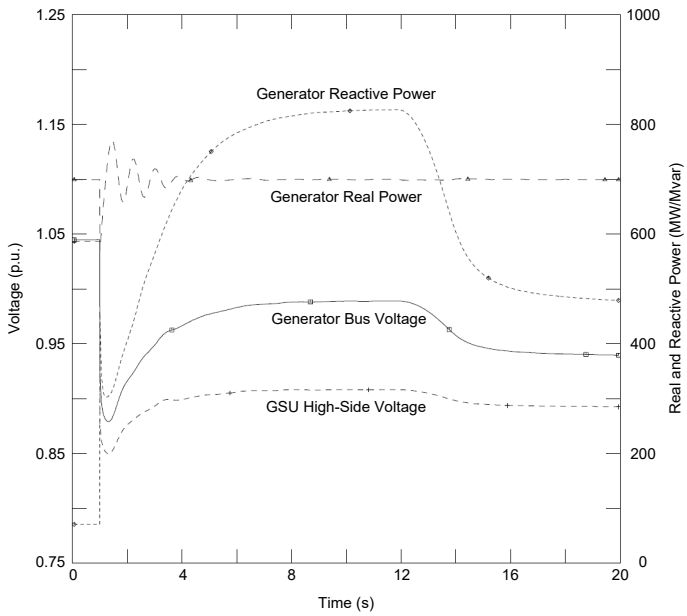

In this simulation the following values are derived:

$$Q = 827.4\ Mvar$$

$$V_{bus\_simulated} = 0.989 \times V_{gen\_nom} = 21.76\ kV$$

The other value required is the Real Power output which is modeled in the simulation at 100% of the gross MW capability reported to the Transmission Planner. In this case:

$$P_{Synch\_reported} = 700.0\ MW$$

Example Calculations: Option 2c

Apparent power (S):

Eq. (50) $S = P_{Synch\_reported} + jQ$

$$S = 700.0\ MW + j827.4\ Mvar$$

$$S = 1083.8\angle 49.8°\ MVA$$

Primary current (I_{pri}):

Eq. (51) $I_{pri} = \frac{S}{\sqrt{3} \times V_{bus\_simulated}}$

$$I_{pri} = \frac{1083.8\ MVA}{1.73 \times 21.76\ kV}$$

$$I_{pri} = 28790\ A$$

Secondary current (I_{sec}):

Eq. (52) $I_{sec} = \frac{I_{pri}}{CT_{ratio}}$

$$I_{sec} = \frac{28790\ A}{\frac{25000}{5}}$$

$$I_{sec} = 5.758\ A$$

To satisfy the 115% margin in Option 2c:

Eq. (53) $I_{\sec limit} > I_{sec} \times 115\%$

$$I_{\sec limit} > 5.758\ A \times 1.15$$

$$I_{\sec limit} > 6.622\ A$$

Example Calculations: Options 3 and 6

Option 3 represents the only calculation for synchronous generators applying a phase time overcurrent (e.g., 51V-C) relay (Enabled to operate as a function of voltage). Similarly, Option 6 uses the same calculation for asynchronous generators.

Example Calculations: Options 3 and 6

Options 3 and 6, Table 1 – Bus Voltage, calls for a 1.0 per unit of the high-side nominal voltage for the generator bus voltage (V_{gen}):

Eq. (54) $V_{gen} = 1.0\ p.u. \times V_{nom} \times GSU_{ratio}$

$$V_{gen} = 1.0 \times 345\ kV \times \left(\frac{22\ kV}{346.5\ kV}\right)$$

$$V_{gen} = 21.9\ kV$$

The voltage setting shall be set less than 75% of the generator bus voltage:

Eq. (55) $V_{setting} < V_{gen} \times 75\%$

$$V_{setting} < 21.9\ kV\ \times 0.75$$

$$V_{setting} < 16.429\ kV$$

Example Calculations: Option 4

This represents the calculation for an asynchronous generator (including inverter-based installations) applying a phase distance relay (e.g., 21) directional toward the Transmission system.

Real Power output (P):

Eq. (56) $P = GEN_{Asych\_nameplate} \times pf$

$$P = 40\ MVA\ \times 0.85$$

$$P = 34.0\ MW$$

Reactive Power output (Q):

Eq. (57) $Q = GEN_{Async\_nameplate} \times \sin(\cos^{-1}(pf))$

$$Q = 40\ MVA \times \sin(\cos^{-1}(0.85))$$

$$Q = 21.1\ Mvar$$

Example Calculations: Option 4

Option 4, Table 1 – Bus Voltage, calls for a 1.0 per unit of the high-side nominal voltage for the generator bus voltage (V_{gen}):

Eq. (58) $$V_{gen} = 1.0\ p.u. \times V_{nom} \times GSU_{ratio}$$

$$V_{gen} = 1.0 \times 345\ kV \times \left(\frac{22\ kV}{346.5\ kV}\right)$$

$$V_{gen} = 21.9\ kV$$

Apparent power (S):

Eq. (59) $$S = P + jQ$$

$$S = 34.0\ MW + j21.1\ Mvar$$

$$S = 40.0\angle 31.8°\ MVA$$

Primary impedance (Z_{pri}):

Eq. (60) $$Z_{pri} = \frac{V_{gen}^2}{S^*}$$

$$Z_{pri} = \frac{(21.9\ kV)^2}{40.0\angle -31.8°\ MVA}$$

$$Z_{pri} = 11.99\ \angle 31.8°\ \Omega$$

Secondary impedance (Z_{sec}):

Eq. (61) $$Z_{sec} = Z_{pri} \times \frac{CT_{Asynch\_ratio}}{PT_{ratio}}$$

$$Z_{sec} = 11.99\ \angle 31.8°\ \Omega \times \frac{\frac{5000}{5}}{\frac{200}{1}}$$

$$Z_{sec} = 11.99\ \angle 31.8°\ \Omega \times 5$$

$$Z_{sec} = 59.95\ \angle 31.8°\ \Omega$$

To satisfy the 130% margin in Option 4:

Eq. (62) $$Z_{\sec limit} = \frac{Z_{sec}}{130\%}$$

Example Calculations: Option 4

$$Z_{\sec limit} = \frac{59.95\angle 31.8°\ \Omega}{1.30}$$

$$Z_{\sec limit} = 46.12\angle 31.8°\ \Omega$$

$$\theta_{transient\ load\ angle} = 31.8°$$

Assume a Mho distance impedance relay with a maximum torque angle (MTA) set at 85°, then the maximum allowable impedance reach is:

Eq. (63) $$Z_{max} < \frac{|Z_{\sec limit}|}{\cos(\theta_{MTA} - \theta_{transient\ load\ angle})}$$

$$Z_{max} < \frac{46.12\ \Omega}{\cos(85.0° - 31.8°)}$$

$$Z_{max} < \frac{46.12\ \Omega}{0.599}$$

$$Z_{max} < 77.0\angle 85.0°\ \Omega$$

Example Calculations: Option 5a

This represents the calculation for three asynchronous generators applying a phase overcurrent (e.g., 50, 51, or 51V-R) relay. In this application it was assumed that 20 Mvar of total static compensation was added.

Real Power output (P):

Eq. (64) $$P = 3 \times GEN_{Asynch\_nameplate} \times pf$$

$$P = 3 \times 40\ MVA \times 0.85$$

$$P = 102.0\ MW$$

Reactive Power output (Q):

Eq. (65) $$Q = MVAR_{static} + MVAR_{gen\_static} + \left(3 \times GEN_{Asynch\_nameplate} \times \sin(\cos^{-1}(pf))\right)$$

$$Q = 15\ Mvar + 5\ Mvar + (3 \times 40\ MVA \times \sin(\cos^{-1}(0.85)))$$

$$Q = 83.2\ Mvar$$

Example Calculations: Option 5a

Option 5a, Table 1 – Bus Voltage, calls for a 1.0 per unit of the high-side nominal voltage for the generator bus voltage (V_{gen}):

Eq. (66) $$V_{gen} = 1.0\ p.u. \times V_{nom} \times GSU_{ratio}$$

$$V_{gen} = 1.0 \times 345\ kV \times \left(\frac{22\ kV}{346.5\ kV}\right)$$

$$V_{gen} = 21.9\ kV$$

Apparent power (S):

Eq. (67) $$S = P + jQ$$

$$S = 102.0\ MW + j83.2\ Mvar$$

$$S = 131.6\angle 39.2°\ MVA$$

Primary current (I_{pri}):

Eq. (68) $$I_{pri} = \frac{S^*}{\sqrt{3} \times V_{gen}}$$

$$I_{pri} = \frac{131.6\angle -39.2°\ MVA}{1.73 \times 21.9\ kV}$$

$$I_{pri} = 3473\angle -39.2°\ A$$

Secondary current (I_{sec}):

Eq. (69) $$I_{sec} = \frac{I_{pri}}{CT_{Asynch\_ratio}}$$

$$I_{sec} = \frac{3473\angle -39.2°\ A}{\frac{5000}{5}}$$

$$I_{sec} = 3.473\angle -39.2°\ A$$

To satisfy the 130% margin in Option 5a:

Eq. (70) $$I_{\sec limit} > I_{sec} \times 130\%$$

$$I_{\sec limit} > 3.473\angle -39.2°\ A \times 1.30$$

Example Calculations: Option 5a

$$I_{\sec limit} > 4.52\angle -39.2°\ A$$

Example Calculations: Option 5b

Similarly to Option 5a, this example represents the calculation for three asynchronous generators applying a phase overcurrent (e.g., 50, 51, or 51V-R) relay. In this application it was assumed that 20 Mvar of total static compensation was added.

Real Power output (P):

Eq. (71) $$P = 3 \times GEN_{Asynch\_nameplate} \times pf$$

$$P = 3 \times 40\ MVA \times 0.85$$

$$P = 102.0\ MW$$

Reactive Power output (Q):

Eq. (72) $$Q = MVAR_{static} + MVAR_{gen\_static} + \left(3 \times GEN_{Asynch\_nameplate} \times \sin(\cos^{-1}(pf))\right)$$

$$Q = 15\ Mvar + 5\ Mvar + (3 \times 40\ MVA \times \sin(\cos^{-1}(0.85)))$$

$$Q = 83.2\ Mvar$$

Option 5b, Table 1 – Bus Voltage, calls for a 1.0 per unit of the high-side nominal voltage for the generator bus voltage (V_{gen}):

Eq. (73) $$V_{gen} = 1.0\ p.u. \times V_{nom} \times GSU_{ratio}$$

$$V_{gen} = 1.0 \times 345\ kV \times \left(\frac{22\ kV}{346.5\ kV}\right)$$

$$V_{gen} = 21.9\ kV$$

Apparent power (S):

Eq. (74) $$S = P + jQ$$

$$S = 102.0\ MW + j83.2\ Mvar$$

$$S = 131.6\angle 39.2°\ MVA$$

Example Calculations: Option 5b

Primary current (I_{pri}):

Eq. (75) $$I_{pri} = \frac{S^*}{\sqrt{3} \times V_{gen}}$$

$$I_{pri} = \frac{131.6\angle -39.2°\ MVA}{1.73 \times 21.9\ kV}$$

$$I_{pri} = 3473\angle -39.2°\ A$$

Secondary current (I_{sec}):

Eq. (76) $$I_{sec} = \frac{I_{pri}}{CT_{Asynch\_ratio}}$$

$$I_{sec} = \frac{3473\angle -39.2°\ A}{\frac{5000}{5}}$$

$$I_{sec} = 3.473\angle -39.2°\ A$$

To satisfy Option 5b, the lower tolerance of the overcurrent element tripping characteristic shall not infringe upon the resource capability (including the Mvar output of the resource and any static or dynamic reactive power devices) See Figure A for more details.

Example Calculations: Options 7a and 10

These examples represent the calculation for a mixture of asynchronous (i.e., Option 10) and synchronous (i.e., Option 7a) generation (including inverter-based installations) applying a phase distance relay (e.g., 21) directional toward the Transmission system. In this application it was assumed 20 Mvar of total static compensation was added.

Synchronous Generation (Option 7a)

Real Power output (P_{sync}):

Eq. (77) $$P_{Synch} = GEN_{Synch\_nameplate} \times pf$$

$$P_{Synch} = 903\ MVA \times 0.85$$

$$P_{Synch} = 767.6\ MW$$

Example Calculations: Options 7a and 10

Reactive Power output (Q_{synch}):

Eq. (78) $Q_{Synch} = 150\% \times P_{Synch}$

$Q_{Synch} = 1.50 \times 767.6\ MW$

$Q_{Synch} = 1151.3\ MW$

Apparent power (S_{Synch}):

Eq. (79) $S_{Synch} = P_{Synch\_reported} + jQ_{Synch}$

$S_{Synch} = 700.0\ MW + j1151.3\ Mvar$

Asynchronous Generation (Option 10)

Real Power output (P_{Asynch}):

Eq. (80) $P_{Asynch} = 3 \times GEN_{Asynch\_nameplate} \times pf$

$P_{Asynch} = 3 \times 40\ MVA \times 0.85$

$P_{Asynch} = 102.0\ MW$

Reactive Power output (Q_{Asynch}):

Eq. (81) $Q_{Asynch} = MVAR_{static} + MVAR_{gen\_static} + \left(3 \times GEN_{Asynch\_nameplate} \times \sin(\cos^{-1}(pf))\right)$

$Q_{Asynch} = 15\ Mvar + 5\ Mvar + (3 \times 40\ MVA \times \sin(\cos^{-1}(0.85)))$

$Q_{Asynch} = 83.2\ Mvar$

Apparent power (S_{Asynch}):

Eq. (82) $S_{Asynch} = P_{Asynch} + jQ_{Asynch}$

$S_{Asynch} = 102.0\ MW + j83.2\ Mvar$

Example Calculations: Options 7a and 10

Options 7a and 10, Table 1 – Bus Voltage, Option 7a specifies 0.95 per unit of the high-side nominal voltage for the generator bus voltage and Option 10 specifies 1.0 per unit of the high-side nominal voltage for generator bus voltage. Due to the presence of the synchronous generator, the 0.95 per unit bus voltage will be used as (V_{gen}) as it results in the most conservative voltage:

Eq. (83) $$V_{gen} = 0.95\ p.u. \times V_{nom} \times GSU_{ratio}$$

$$V_{gen} = 0.95 \times 345\ kV \times \left(\frac{22\ kV}{346.5\ kV}\right)$$

$$V_{gen} = 20.81\ kV$$

Apparent power (S) accounted for 115% margin requirement for a synchronous generator and 130% margin requirement for an asynchronous generator:

Eq. (84) $$S = 115\% \times \left(P_{Synch\_reported} + jQ_{Synch}\right) + 130\% \times \left(P_{Asynch} + jQ_{Asynch}\right)$$

$$S = 1.15 \times (700.0\ MW + j1151.3\ Mvar) + 1.30 \times (102.0\ MW + j83.2\ Mvar)$$

$$S = 1711.8\ \angle 56.8°\ MVA$$

Primary impedance (Z_{pri}):

Eq. (85) $$Z_{pri} = \frac{V_{gen}^2}{S^*}$$

$$Z_{pri} = \frac{(20.81\ kV)^2}{1711.8\angle -56.8°\ MVA}$$

$$Z_{pri} = 0.2527\angle 56.8°\ \Omega$$

Secondary impedance (Z_{sec}):

Eq. (86) $$Z_{sec} = Z_{pri} \times \frac{CT_{ratio}}{PT_{ratio}}$$

$$Z_{sec} = 0.2527\angle 56.8°\ \Omega \times \frac{\frac{25000}{5}}{\frac{200}{1}}$$

$$Z_{sec} = 0.2527\angle 56.8°\ \Omega \times 25$$

$$Z_{sec} = 6.32\angle 56.8°\ \Omega$$

Example Calculations: Options 7a and 10

No additional margin is needed because the synchronous apparent power has been multiplied by 1.15 (115%) and the asynchronous apparent power has been multiplied by 1.30 (130%) in Equation 84 to satisfy the margin requirements in Options 7a and 10.

Eq. (87) $$Z_{\sec limit} = \frac{Z_{sec}}{100\%}$$

$$Z_{\sec limit} = \frac{6.32 \angle 56.8° \ \Omega}{1.00}$$

$$Z_{\sec limit} = 6.32 \angle 56.8° \ \Omega$$

$$\theta_{transient\ load\ angle} = 56.8°$$

Assume a Mho distance impedance relay with a maximum torque angle (MTA) set at 85°, then the maximum allowable impedance reach is:

Eq. (88) $$Z_{max} < \frac{|Z_{\sec limit}|}{\cos(\theta_{MTA} - \theta_{transient\ load\ angle})}$$

$$Z_{max} < \frac{6.32 \ \Omega}{\cos(85.0° - 56.8°)}$$

$$Z_{max} < \frac{6.32 \ \Omega}{0.881}$$

$$Z_{max} < \ 7.17 \angle 85.0° \ \Omega$$

Example Calculations: Options 8a and 9a

Options 8a and 9a represent the simplest calculation for synchronous generators applying a phase overcurrent (e.g., 50, 51, or 67) relay. The following uses the $GEN_{Synch\_nameplate}$ value to represent an "aggregate" value to illustrate the option:

Real Power output (P):

Eq. (89) $$P = \ GEN_{Synch\_nameplate} \times pf$$

$$P = 903 \ MVA \ \times 0.85$$

$$P = 767.6 \ MW$$

Example Calculations: Options 8a and 9a

Reactive Power output (Q):

Eq. (90) $Q = 150\% \times P$

$$Q = 1.50 \times 767.6\ MW$$

$$Q = 1151.3\ Mvar$$

Options 8a and 9a, Table 1 – Bus Voltage, calls for a generator bus voltage corresponding to 0.95 per unit of the high-side nominal voltage times the turns ratio of the generator step-up transformer generator bus voltage (V_{gen}):

Eq. (91) $V_{gen} = 0.95\ p.u. \times V_{nom} \times GSU_{ratio}$

$$V_{gen} = 0.95 \times 345\ kV \times \left(\frac{22\ kV}{346.5\ kV}\right)$$

$$V_{gen} = 20.81\ kV$$

Apparent power (S):

Eq. (92) $S = P_{Synch\_reported} + jQ$

$$S = 700.0\ MW + j1151.3\ Mvar$$

$$S = 1347.4\angle 58.7°\ MVA$$

Primary current (I_{pri}):

Eq. (93) $I_{pri} = \frac{S}{\sqrt{3} \times V_{gen}}$

$$I_{pri} = \frac{1347.4\ MVA}{1.73 \times 20.81\ kV}$$

$$I_{pri} = 37383\ A$$

Secondary current (I_{sec}):

Eq. (94) $I_{sec} = \frac{I_{pri}}{CT_{ratio}}$

$$I_{sec} = \frac{37383\ A}{\frac{25000}{5}}$$

Example Calculations: Options 8a and 9a

$$I_{sec} = 7.477\ A$$

To satisfy the 115% margin in Options 8a and 9a:

Eq. (95) $$I_{\sec limit} > I_{sec} \times 115\%$$

$$I_{\sec limit} > 7.477\ A \times 1.15$$

$$I_{\sec limit} > 8.598\ A$$

Example Calculations: Options 8b and 9b

Options 8b and 9b represent a more precise calculation for synchronous generators applying a phase overcurrent (e.g., 50, 51, or 67) relay. The following uses the $GEN_{Synch\_nameplate}$ value to represent an "aggregate" value to illustrate the option:

Real Power output (P):

Eq. (96) $$P = GEN_{Synch\_nameplate} \times pf$$

$$P = 903\ MVA \times 0.85$$

$$P = 767.6\ MW$$

Reactive Power output (Q):

Eq. (97) $$Q = 150\% \times P$$

$$Q = 1.50 \times 767.6\ MW$$

$$Q = 1151.3\ Mvar$$

Convert Real Power, Reactive Power, and transformer reactance to per unit values on 767.6 MVA base (GSU transformer MVA_{base}).

Real Power output (P):

Eq. (98) $$P_{pu} = \frac{P_{Synch\_reported}}{MVA_{base}}$$

$$P_{pu} = \frac{700.0\ MW}{767.6\ MVA}$$

Example Calculations: Options 8b and 9b

$$P_{pu} = 0.91\ p.u.$$

Reactive Power output (Q):

Eq. (99) $$Q_{pu} = \frac{Q}{MVA_{base}}$$

$$Q_{pu} = \frac{1151.3\ Mvar}{767.6\ MVA}$$

$$Q_{pu} = 1.5\ p.u.$$

Transformer impedance:

Eq. (100) $$X_{pu} = X_{GSU(old)} \times \frac{MVA_{base}}{MVA_{GSU}}$$

$$X_{pu} = 12.14\% \times \left(\frac{767.6\ MVA}{903\ MVA}\right)$$

$$X_{pu} = 0.1032\ p.u.$$

Using the formula below; calculate the low-side GSU transformer voltage ($V_{low\text{-}side}$) using 0.85 p.u. high-side voltage ($V_{high\text{-}side}$). Assume initial low-side voltage to be 0.95 p.u. and repeat the calculation as necessary until $V_{low\text{-}side}$ converges. A convergence of less than one percent (<1%) between iterations is considered sufficient:

Eq. (101) $$\theta_{low-side} = \sin^{-1}\left[\frac{(P_{pu} \times |X_{pu}|)}{(|V_{low-side}| \times [V_{high-side}])}\right]$$

$$\theta_{low-side} = \sin^{-1}\left[\frac{(0.91 \times 0.1032)}{(0.95 \times 0.85)}\right]$$

Eq. (102)

$$|V_{low-side}| = \frac{|V_{high-side}| \times \cos(\theta_{low-side}) \pm \sqrt{|V_{high-side}|^2 \times \cos^2(\theta_{low-side}) + 4 \times Q_{pu} \times X_{pu}}}{2}$$

$$|V_{low-side}| = \frac{|0.85| \times \cos(6.7°) \pm \sqrt{|0.85|^2 \times \cos^2(6.7°) + 4 \times 1.5 \times 0.1032}}{2}$$

$$|V_{low-side}| = \frac{|0.85| \times 0.9931 \pm \sqrt{0.7225 \times 0.9864 + 0.6192}}{2}$$

Example Calculations: Options 8b and 9b

$$|V_{low-side}| = \frac{0.8441 \pm 1.1541}{2}$$

$$|V_{low-side}| = 0.9991\ p.u.$$

Use the new estimated $V_{low\text{-}side}$ value of 0.9991 per unit for the second iteration:

Eq. (103) $$\theta_{low-side} = \sin^{-1}\left[\frac{(P_{pu} \times |X_{pu}|)}{(|V_{low-side}| \times [V_{high-side}])}\right]$$

$$\theta_{low-side} = \sin^{-1}\left[\frac{(0.91 \times 0.1032)}{(0.9991 \times 0.85)}\right]$$

$$\theta_{low-side} = 6.3°$$

Eq. (104)

$$|V_{low-side}| = \frac{|V_{high-side}| \times \cos(\theta_{low-side}) \pm \sqrt{|V_{high-side}|^2 \times \cos^2(\theta_{low-side}) + 4 \times Q_{pu} \times X_{pu}}}{2}$$

$$|V_{low-side}| = \frac{|0.85| \times \cos(6.3°) \pm \sqrt{|0.85|^2 \times \cos^2(6.3°) + 4 \times 1.5 \times 0.1032}}{2}$$

$$|V_{low-side}| = \frac{|0.85| \times 0.9940 \pm \sqrt{0.7225 \times 0.9880 + 0.6192}}{2}$$

$$|V_{low-side}| = \frac{0.8449 \pm 1.1546}{2}$$

$$|V_{low-side}| = 0.9998\ p.u.$$

To account for system high-side nominal voltage and the transformer tap ratio:

Eq. (105) $$V_{bus} = |V_{low-side}| \times V_{nom} \times GSU_{ratio}$$

$$V_{bus} = 0.9998\ p.u. \times 345\ kV \times \left(\frac{22\ kV}{346.5\ kV}\right)$$

$$V_{bus} = 21.90\ kV$$

Apparent power (S):

Eq. (106) $$S = P_{Synch\_reported} + jQ$$

Example Calculations: Options 8b and 9b

$$S = 700.0\ MW + j1151.3\ Mvar$$

$$S = 1347.4\angle 58.7°\ MVA$$

Primary current (I_{pri}):

Eq. (107) $$I_{pri} = \frac{S}{\sqrt{3} \times V_{bus}}$$

$$I_{pri} = \frac{1347.4\ MVA}{1.73 \times 21.90\ kV}$$

$$I_{pri} = 35553\ A$$

Secondary current (I_{sec}):

Eq. (108) $$I_{sec} = \frac{I_{pri}}{CT_{ratio}}$$

$$I_{sec} = \frac{35553\ A}{\frac{25000}{5}}$$

$$I_{sec} = 7.111\ A$$

To satisfy the 115% margin in Options 8b and 9b:

Eq. (109) $$I_{\sec limit} > I_{sec} \times 115\%$$

$$I_{\sec limit} > 7.111\ A \times 1.15$$

$$I_{\sec limit} > 8.178\ A$$

Example Calculations: Options 8a, 9a, 11, and 12

This example represents the calculation for a mixture of asynchronous and synchronous generators applying a phase overcurrent (e.g., 50, 51, or 67) relays. In this application it was assumed 20 Mvar of total static compensation was added. The current transformers (CT) are located on the low-side of the GSU transformer.

Example Calculations: Options 8a, 9a, 11, and 12

Synchronous Generation (Options 8a and 9a)

Real Power output (P_{Synch}):

Eq. (110) $$P_{Synch} = GEN_{Synch\_nameplate} \times pf$$

$$P_{Synch} = 903\ MVA \times .85$$

$$P_{Synch} = 767.6\ MW$$

Reactive Power output (Q_{Synch}):

Eq. (111) $$Q_{Synch} = 150\% \times P_{Synch}$$

$$Q_{Synch} = 1.50 \times 767.6\ MW$$

$$Q_{Synch} = 1151.3\ Mvar$$

Apparent power (S_{Synch}):

Eq. (112) $$S_{Synch} = P_{Synch\_reported} + jQ_{Synch}$$

$$S_{Synch} = 700.0\ MW + j1151.3\ Mvar$$

$$S_{Synch} = 1347.4\ \angle 58.7°\ MVA$$

Option 8a, Table 1 – Bus Voltage calls for a 0.95 per unit of the high-side nominal voltage as a basis for generator bus voltage (V_{gen}):

Eq. (113) $$V_{gen} = 0.95\ p.u. \times V_{nom} \times GSU_{ratio}$$

$$V_{gen} = 0.95 \times 345\ kV \times \left(\frac{22\ kV}{346.5\ kV}\right)$$

$$V_{gen} = 20.81\ kV$$

Primary current ($I_{pri\text{-}sync}$):

Eq. (114) $$I_{pri-sync} = \frac{115\% \times S^*_{Synch}}{\sqrt{3} \times V_{gen}}$$

$$I_{pri-sync} = \frac{1.15 \times (1347.4\ \angle -58.7°\ MVA)}{1.73 \times 20.81\ kV}$$

Example Calculations: Options 8a, 9a, 11, and 12

$$I_{pri-sync} = 43061 \angle -58.7° \ A$$

Asynchronous Generation (Options 11 and 12)

Real Power output (P_{Asynch}):

Eq. (115) $$P_{Asynch} = 3 \times GEN_{Asynch\_nameplate} \times pf$$

$$P_{Asynch} = 3 \times 40 \ MVA \ \times 0.85$$

$$P_{Asynch} = 102.0 \ MW$$

Reactive Power output (Q_{Asynch}):

Eq. (116) $$Q_{Asynch} = MVAR_{static} + MVAR_{gen\_static} + GEN_{Asynch\_nameplate} \times \sin(\cos^{-1}(pf))$$

$$Q_{Asynch} = 15 \ Mvar + 5 \ Mvar + (3 \times 40 \ MVA \times \sin(\cos^{-1}(0.85)))$$

$$Q_{Asynch} = 83.2 \ Mvar$$

Option 11, Table 1 – Bus Voltage, calls for a 1.0 per unit of the high-side nominal voltage for the generator bus voltage (V_{gen}), however due to the presence of synchronous generator 0.95 per unit bus voltage will be used:

Eq. (117) $$V_{gen} = 0.95 \ p.u. \times V_{nom} \times GSU_{ratio}$$

$$V_{gen} = 0.95 \times 345 \ kV \times \left(\frac{22 \ kV}{346.5 \ kV}\right)$$

$$V_{gen} = 20.81 \ kV$$

Apparent power (S_{Asynch}):

Eq. (118) $$S_{Asynch} = 130\% \ \times (P_{Asynch} + jQ_{Asynch})$$

$$S_{Asynch} = 1.30 \ \times (102.0 \ MW + j83.2 \ Mvar)$$

$$S_{Asynch} = 171.1 \angle 39.2° \ MVA$$

Primary current ($I_{pri\text{-}async}$):

Eq. (119) $$I_{pri-async} = \frac{S_{Asych}}{\sqrt{3} \times V_{gen}}$$

Example Calculations: Options 8a, 9a, 11, and 12

$$I_{pri-async} = \frac{171.1 \angle -39.2° \; MVA}{1.73 \; \times 20.81 \; kV}$$

$$I_{pri-async} = 4755 \angle -39.2° \; A$$

Secondary current (I_{sec}):

Eq. (120) $$I_{sec} = \frac{I_{pri-sync}}{CT_{ratio}} + \frac{I_{pri-async}}{CT_{ratio}}$$

$$I_{sec} = \frac{43061 \angle -58.7° \; A}{\frac{25000}{5}} + \frac{4755 \angle -39.2° \; A}{\frac{25000}{5}}$$

$$I_{sec} = 9.514 \angle -56.8° \; A$$

No additional margin is needed because the synchronous apparent power has been multiplied by 1.15 (115%) in Equation 114 and the asynchronous apparent power has been multiplied by 1.30 (130%) in Equation 118.

Eq. (121) $$I_{\sec limit} > I_{sec} \times 100\%$$

$$I_{\sec limit} > 9.514 \angle -56.8° \; A \times 1.00$$

$$I_{\sec limit} > 9.514 \angle -56.8° \; A$$

Example Calculations: Options 8c and 9c

This example uses Option 15b as a simulation example for a synchronous generator applying a phase overcurrent relay (e.g., 50, 51, or 67). In this application the same synchronous generator is modeled as for Options 1c, 2c, and 7c. The CTs are located on the low-side of the GSU transformer.

The generator Reactive Power and generator bus voltage are determined by simulation. The maximum Reactive Power output on the low-side of the GSU transformer, during field-forcing, is used since this value will correspond to the highest current. The corresponding generator bus voltage is also used in the calculation. Note that although the excitation limiter reduces the field, the duration of the Reactive Power output achieved for this condition is sufficient to operate a phase overcurrent relay.

Example Calculations: Options 8c and 9c

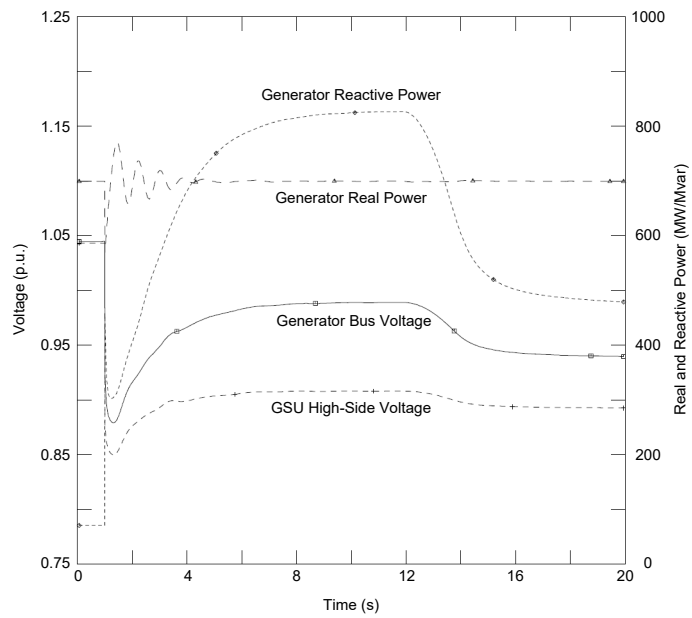

In this simulation the following values are derived:

$$Q = 827.4\ Mvar$$

$$V_{bus\_simulated} = 0.989 \times V_{gen} = 21.76\ kV$$

The other value required is the Real Power output which is modeled in the simulation at 100% of the gross MW capability reported to the Transmission Planner. In this case:

$$P_{reported} = 700.0\ MW$$

Apparent power (S):

Eq. (122) $$S = P_{Synch\_reported} + jQ$$

$$S = 700.0\ MW + j827.4\ Mvar$$

$$S = 1083.8\angle 49.8°$$

Primary current (I_{pri}):

Eq. (123) $$I_{pri} = \frac{S}{\sqrt{3} \times V_{bus\_simulated}}$$

$$I_{pri} = \frac{1083.8\ MVA}{1.73 \times 21.76\ kV}$$

Example Calculations: Options 8c and 9c

$$I_{pri} = 28790\ A$$

Secondary current (I_{sec}):

Eq. (124) $$I_{sec} = \frac{I_{pri}}{CT_{ratio}}$$

$$I_{sec} = \frac{28790\ A}{\frac{25000}{5}}$$

$$I_{sec} = 5.758\ A$$

To satisfy the 115% margin in Options 8c and 9c:

Eq. (125) $$I_{\sec limit} > I_{sec} \times 115\%$$

$$I_{\sec limit} > 5.758\ A \times 1.15$$

$$I_{\sec limit} > 6.622\ A$$

Example Calculations: Option 10

This example represents the calculation for three asynchronous generators (including inverter-based installations) applying a phase distance relay (e.g., 21) directional toward the Transmission system. In this application it was assumed 20 Mvar of total static compensation was added.

Real Power output (P):

Eq. (126) $$P = 3 \times GEN_{Asych\_nameplate} \times pf$$

$$P = 3 \times 40\ MVA \times 0.85$$

$$P = 102.0\ MW$$

Reactive Power output (Q):

Eq. (127) $$Q = MVAR_{static} + MVAR_{gen\_static} + \left(3 \times GEN_{Asynch\_nameplate} \times \sin(\cos^{-1}(pf))\right)$$

$$Q = 15\ Mvar + 5\ Mvar + (3 \times 40\ MVA \times \sin(\cos^{-1}(0.85)))$$

$$Q = 83.2\ Mvar$$

Example Calculations: Option 10

Option 10, Table 1 – Bus Voltage, calls for a 1.0 per unit of the high-side nominal voltage for the generator bus voltage (V_{gen}):

Eq. (128) $$V_{gen} = 1.0\ p.u. \times V_{nom} \times GSU_{ratio}$$

$$V_{gen} = 1.0 \times 345\ kV \times \left(\frac{22\ kV}{346.5\ kV}\right)$$

$$V_{gen} = 21.9\ kV$$

Apparent power (S):

Eq. (129) $$S = P + jQ$$

$$S = 102.0\ MW + j83.2\ Mvar$$

$$S = 131.6\angle 39.2°\ MVA$$

Primary impedance (Z_{pri}):

Eq. (130) $$Z_{pri} = \frac{V_{gen}^2}{S^*}$$

$$Z_{pri} = \frac{(21.9\ kV)^2}{131.6\angle -39.2°\ MVA}$$

$$Z_{pri} = 3.644\ \angle 39.2°\ \Omega$$

Secondary impedance (Z_{sec}):

Eq. (131) $$Z_{sec} = Z_{pri} \times \frac{CT_{Asynch\_ratio}}{PT_{ratio}}$$

$$Z_{sec} = 3.644\ \angle 39.2°\ \Omega \times \frac{\frac{5000}{5}}{\frac{200}{1}}$$

$$Z_{sec} = 3.644\ \angle 39.2°\ \Omega \times 5$$

$$Z_{sec} = 18.22\ \angle 39.2°\ \Omega$$

To satisfy the 130% margin in Option 10:

Eq. (132) $$Z_{\sec limit} = \frac{Z_{sec}}{130\%}$$

Example Calculations: Option 10

$$Z_{\sec limit} = \frac{18.22\angle 39.2°\ \Omega}{1.30}$$

$$Z_{\sec limit} = 14.02\angle 39.2°\ \Omega$$

$$\theta_{transient\ load\ angle} = 39.2°$$

Assume a Mho distance impedance relay with a maximum torque angle (MTA) set at 85°, then the maximum allowable impedance reach is:

Eq. (133) $$Z_{max} < \frac{|Z_{\sec limit}|}{\cos(\theta_{MTA} - \theta_{transient\ load\ angle})}$$

$$Z_{max} < \frac{14.02\ \Omega}{\cos(85.0° - 39.2°)}$$

$$Z_{max} < \frac{14.02\ \Omega}{0.6972}$$

$$Z_{max} < 20.11\angle 85.0°\ \Omega$$

Example Calculations: Options 11 and 12

Option 11 represents the calculation for a GSU transformer applying a phase overcurrent (e.g., 50 or 51) relay connected to three asynchronous generators. Similarly, these calculations can be applied to Option 12 for a phase directional overcurrent relay (e.g., 67) directional toward the Transmission system. In this application it was assumed 20 Mvar of total static compensation was added.

Real Power output (P):

Eq. (134) $$P = 3 \times GEN_{Asynch\_nameplate} \times pf$$

$$P = 3 \times 40\ MVA \times 0.85$$

$$P = 102.0\ MW$$

Reactive Power output (Q):

Eq. (135) $$Q = MVAR_{static} + MVAR_{gen\_static} + \left(3 \times GEN_{Asynch\_nameplate} \times \sin(\cos^{-1}(pf))\right)$$

$$Q = 15\ Mvar + 5\ Mvar + (3 \times 40\ MVA \times \sin(\cos^{-1}(0.85)))$$

Example Calculations: Options 11 and 12

$$Q = 83.2\ Mvar$$

Options 11 and 12, Table 1 – Bus Voltage, calls for a 1.0 per unit of the high-side nominal voltage for the generator bus voltage (V_{gen}):

Eq. (136) $$V_{gen} = 1.0\ p.u. \times V_{nom} \times GSU_{ratio}$$

$$V_{gen} = 1.0 \times 345\ kV \times \left(\frac{22\ kV}{346.5\ kV}\right)$$

$$V_{gen} = 21.9\ kV$$

Apparent power (S):

Eq. (137) $$S = P + jQ$$

$$S = 102.0\ MW + j83.2\ Mvar$$

$$S = 131.6\ \angle 39.2°\ MVA$$

Primary current (I_{pri}):

Eq. (138) $$I_{pri} = \frac{S^*}{\sqrt{3} \times V_{gen}}$$

$$I_{pri} = \frac{131.6\ \angle -39.2°\ MVA}{1.73 \times 21.9\ kV}$$

$$I_{pri} = 3473\angle -39.2°\ A$$

Secondary current (I_{sec}):

Eq. (139) $$I_{sec} = \frac{I_{pri}}{CT_{Asynch\_ratio}}$$

$$I_{sec} = \frac{3473\angle -39.2°\ A}{\frac{5000}{5}}$$

$$I_{sec} = 3.473\angle -39.2°\ A$$

To satisfy the 130% margin in Options 11 and12:

Eq. (140) $$I_{\sec limit} > I_{sec} \times 130\%$$

Example Calculations: Options 11 and 12

$$I_{\sec limit} > 3.473\angle -39.2° \; A \times 1.30$$

$$I_{\sec limit} > 4.515\angle -39.2° \; A$$

Example Calculations: Options 13a and 13b

Option 13a for the UAT assumes the maximum nameplate rating of the winding is utilized for the purposes of the calculations and the appropriate voltage. Similarly, Option 13b uses the measured current while operating at the maximum gross MW capability reported to the Transmission Planner.

Primary current (I_{pri}):

Eq. (141) $$I_{pri} = \frac{UAT_{nameplate}}{\sqrt{3} \times V_{UAT}}$$

$$I_{pri} = \frac{60 \; MVA}{1.73 \times 13.8 \; kV}$$

$$I_{pri} = 2510.2 \; A$$

Secondary current (I_{sec}):

Eq. (142) $$I_{sec} = \frac{I_{pri}}{CT_{UAT}}$$

$$I_{sec} = \frac{2510.2 \; A}{\frac{5000}{5}}$$

$$I_{sec} = 2.51 \text{ A}$$

To satisfy the 150% margin in Options 13a:

Eq. (143) $$I_{\sec limit} > I_{sec} \times 150\%$$

$$I_{\sec limit} > 2.51 \; A \times 1.50$$

$$I_{\sec limit} > 3.77 \; A$$

Example Calculations: Option 14a

Option 14a represents the calculation for relays installed on the high-side of the GSU transformer, including relays installed on the remote end of line, for Elements that connect a GSU transformer to the Transmission system that are used exclusively to export energy directly from a BES generating unit or generating plant that connected to synchronous generation. In this example, the Element is protected by a phase distance (e.g., 21) relay directional toward the Transmission system. The CTs are located on the high-side of the GSU transformer.

Real Power output (P):

Eq. (144) $$P = GEN_{Synch\_nameplate} \times pf$$

$$P = 903\ MVA\ \times 0.85$$

$$P = 767.6\ MW$$

Reactive Power output (Q):

Eq. (145) $$Q = 120\% \times P$$

$$Q = 1.20 \times 767.6\ MW$$

$$Q = 921.1\ Mvar$$

Option 14a, Table 1 – Bus Voltage, calls for a 0.85 per unit of the line nominal voltage for the GSU transformer voltage (V_{nom}):

Eq. (146) $$V_{bus} = 0.85\ p.u. \times V_{nom}$$

$$V_{gen} = 0.85 \times 345\ kV$$

$$V_{gen} = 293.25\ kV$$

Apparent power (S):

Eq. (147) $$S = P_{Synch\_reported} + jQ$$

$$S = 700.0\ MW + j921.1\ Mvar$$

$$S = 1157.0\angle 52.77°\ MVA$$

$$\theta_{transient\ load\ angle} = 52.77°$$

Example Calculations: Option 14a

Primary impedance (Z_{pri}):

Eq. (148) $$Z_{pri} = \frac{V_{bus}^2}{S^*}$$

$$Z_{pri} = \frac{(293.25\ kV)^2}{1157.0\angle -52.77°\ MVA}$$

$$Z_{pri} = 74.335\angle 52.77°\ \Omega$$

Secondary impedance (Z_{sec}):

Eq. (149) $$Z_{sec} = Z_{pri} \times \frac{CT_{ratio\_hv}}{PT_{ratio\_hv}}$$

$$Z_{sec} = 74.335\angle 52.77°\ \Omega \times \frac{\frac{2000}{5}}{\frac{2000}{1}}$$

$$Z_{sec} = 74.335\angle 52.77°\ \Omega \times 0.2$$

$$Z_{sec} = 14.867\angle 52.77°\ \Omega$$

To satisfy the 115% margin in Option 14a:

Eq. (150) $$Z_{\sec limit} = \frac{Z_{sec}}{115\%}$$

$$Z_{\sec limit} = \frac{14.867\angle 52.77°\ \Omega}{1.15}$$

$$Z_{\sec limit} = 12.928\angle 52.77°\ \Omega$$

$$\theta_{transient\ load\ angle} = 52.77°$$

Assume a Mho distance impedance relay with a maximum torque angle (MTA) set at 85°, then the maximum allowable impedance reach is:

Eq. (151) $$Z_{max} < \frac{|Z_{\sec limit}|}{\cos(\theta_{MTA} - \theta_{transient\ load\ angle})}$$

$$Z_{max} < \frac{12.928\ \Omega}{\cos(85.0° - 52.77°)}$$

Example Calculations: Option 14a

$$Z_{max} < \frac{12.928\ \Omega}{0.846}$$

$$Z_{max} < \ 15.283\angle 85.0°\ \Omega$$

Example Calculations: Option 14b

Option 14b represents the simulation for relays installed on the high-side of the GSU transformer, including relays installed on the remote end of line, for Elements that connect a GSU transformer to the Transmission system that are used exclusively to export energy directly from a BES generating unit or generating plant connected to synchronous generation. In this example, the Element is protected by a phase distance (e.g., 21) relay directional toward the Transmission system. The CTs are located on the high-side of the GSU transformer.

Relays installed on the high-side of the GSU transformer, including relays installed on the remote end of line, simulation is used to determine the simulated line voltage at the relay location coincident with the highest Reactive Power output achieved during field-forcing in response to a 0.85 per unit of the line nominal voltage at the remote end of the line prior to field-forcing. This is achieved by modeling a shunt at the remote end (i.e., at the Transmission system) of the line during simulation.

The maximum Reactive Power flow and coincident voltage for both the high-side of the GSU transformer and remote end of the line are determined by simulation. The maximum Reactive Power output on the high-side of the GSU transformer and remote end of the line during field-forcing is used as these values will correspond to the lowest apparent impedance at the relay location. The corresponding simulated voltage is also used in the calculation. Note that although the excitation limiter reduces the field, the duration of the Reactive Power output achieved for this condition is sufficient to operate a phase distance relay.

Example Calculations: Option 14b

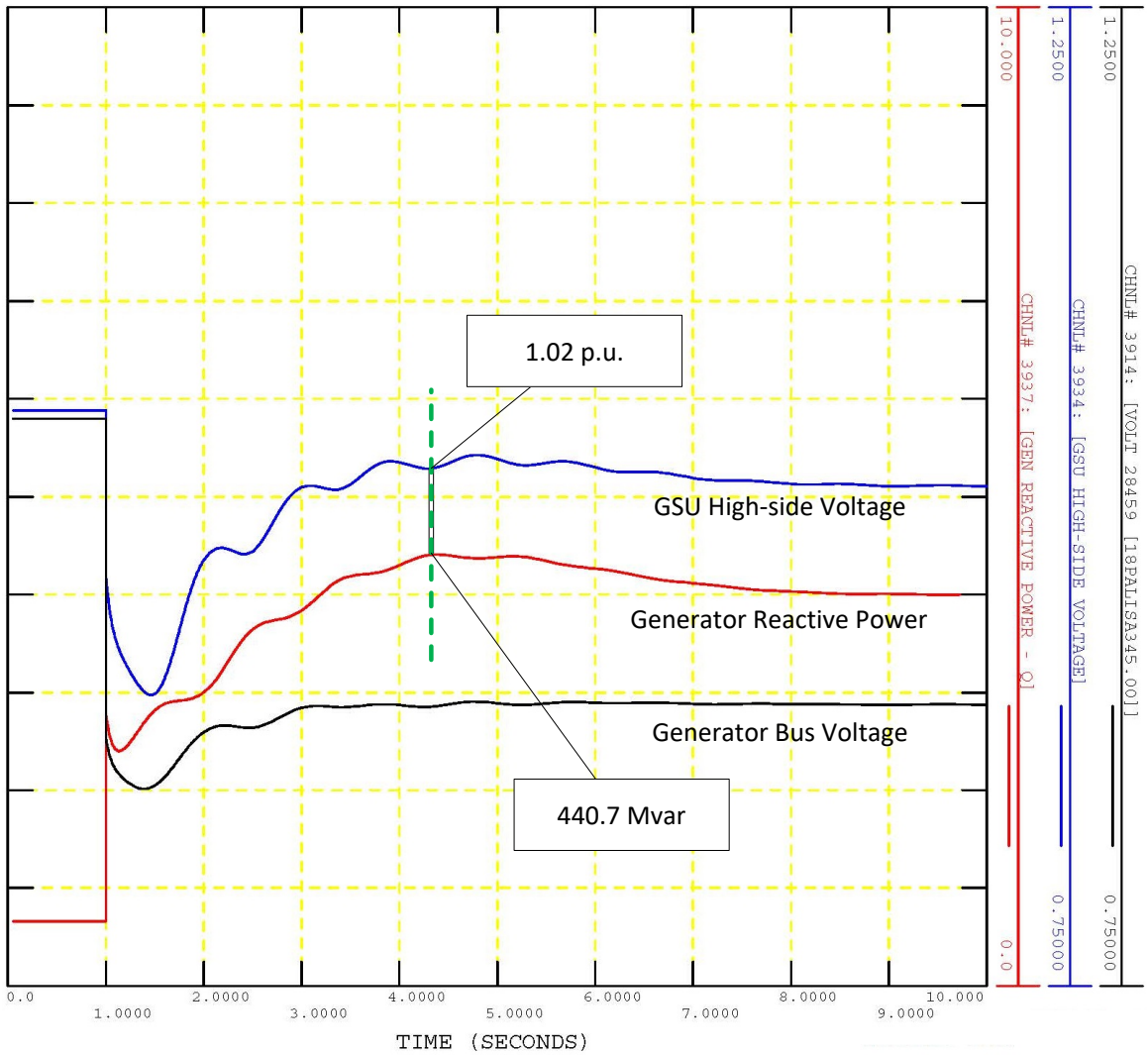

In this simulation the following values are derived:

$$Q = 440.7\ Mvar$$

$$V_{bus\_simulated} = 1.02 \times V_{nom} = 351.9\ kV$$

The other value required is the Real Power output which is modeled in the simulation at 100% of the gross MW capability reported to the Transmission Planner. In this case:

$$P_{reported} = 700.0\ MW$$

Apparent power (S):

Eq. (152) $S = P_{Synch\_reported} + jQ$

Example Calculations: Option 14b

$$S = 700.0\ MW + j440.7\ Mvar$$

$$S = 827.2\angle 32.2°\ MVA$$

$$\theta_{transient\ load\ angle} = 32.2°$$

Primary impedance (Z_{pri}):

Eq. (153) $$Z_{pri} = \frac{V_{bus\_simulated}^2}{S^*}$$

$$Z_{pri} = \frac{(351.9\ kV)^2}{827.2\angle -32.2°\ MVA}$$

$$Z_{pri} = 149.7\angle 32.2°\ \Omega$$

Secondary impedance (Z_{sec}):

Eq. (154) $$Z_{sec} = Z_{pri} \times \frac{CT_{ratio\_hv}}{PT_{ratio\_hv}}$$

$$Z_{sec} = 149.7\angle 32.2°\ \Omega \times \frac{\frac{2000}{5}}{\frac{2000}{1}}$$

$$Z_{sec} = 149.7\angle 32.2°\ \Omega \times 0.2$$

$$Z_{sec} = 29.9\angle 32.2°\ \Omega$$

To satisfy the 115% margin in Option 14b:

Eq. (155) $$Z_{\sec limit} = \frac{Z_{sec}}{115\%}$$

$$Z_{\sec limit} = \frac{29.9\angle 32.2°\ \Omega}{1.15}$$

$$Z_{\sec limit} = 26.0\angle 32.2°\ \Omega$$

$$\theta_{transient\ load\ angle} = 32.2°$$

Example Calculations: Option 14b

Assume a Mho distance impedance relay with a maximum torque angle (MTA) set at 85°, then the maximum allowable impedance reach is:

Eq. (156) $$Z_{max} < \frac{|Z_{\sec limit}|}{\cos\left(\theta_{MTA} - \theta_{transient\ load\ angle}\right)}$$

$$Z_{max} < \frac{26.0\ \Omega}{\cos(85.0° - 32.2°)}$$

$$Z_{max} < \frac{26.0\ \Omega}{0.61}$$

$$Z_{max} < \ 43.0\angle 85.0°\ \Omega$$

Example Calculations: Options 15a and 16a

Options 15a and 16a represent the calculation for relay installed on the high-side of the GSU transformer, including relays installed at the remote end of the line, for Elements that connect a GSU transformer to the Transmission system that are used exclusively to export energy directly from a BES generating unit or generating plant connected to synchronous generation.

Option 15a represents applying a phase time overcurrent relay (e.g., 51) and/or phase instantaneous overcurrent supervisory elements (e.g., 50) associated with current-based, communication-assisted schemes where the scheme is capable of tripping for loss of communications installed on the high-side of the GSU transformer, including relays installed at the remote end of the line.

Option 16a represents applying a phase directional instantaneous overcurrent supervisory element (e.g., 67) associated with current-based, communication-assisted schemes where the scheme is capable of tripping for loss of communications directional toward the Transmission system installed on the high-side of the GSU and at the remote end of the line and/or a phase time directional overcurrent relay (e.g., 67) directional toward the Transmission system installed on the high-side of the GSU transformer, including relays installed at the remote end of the line.

Example calculations are provided for the case, where potential transformers (PT) and current transformers (CT) are located at the high-side of the GSU transformer and the 0.85 per unit of the line nominal voltage at the high-side of the GSU transformer. Example calculations are also provided for the case where PTs and CTs are located at the remote end of the line and the 0.85 per unit of the line nominal voltage will be at the remote bus

Example Calculations: Options 15a and 16a

location.

Calculations at the high-side of the GSU transformer.

Real Power output (P):

Eq. (157) $P = GEN_{Synch\_nameplate} \times pf$

$P = 903\ MVA\ \times 0.85$

$P = 767.6\ MW$

Reactive Power output (Q):

Eq. (158) $Q = 120\% \times P$

$Q = 1.20 \times 767.6\ MW$

$Q = 921.12\ Mvar$

Option 15a, Table 1 – Bus Voltage, calls for a 0.85 per unit of the line nominal voltage:

Eq. (159) $V_{bus} = 0.85\ p.u. \times V_{nom}$

$V_{bus} = 0.85 \times 345\ kV$

$V_{bus} = 293.25\ kV$

Apparent power (S):

Eq. (160) $S = P_{Synch\_reported} + jQ$

$S = 700.0\ MW + j921.12\ Mvar$

$S = 1157\angle 52.8°\ MVA$

Primary current (I_{pri}):

Eq. (161) $I_{pri} = \dfrac{S^*}{\sqrt{3} \times V_{bus}}$

$I_{pri} = \dfrac{1157\angle -52.8°\ MVA}{1.73 \times 293.25\ kV}$

$I_{pri} = 2280.6\angle -52.8°\ A$

Example Calculations: Options 15a and 16a

Secondary current (I_{sec}):

Eq. (162) $$I_{sec} = \frac{I_{pri}}{CT_{ratio\_hv}}$$

$$I_{sec} = \frac{2280.6\angle -52.8°\ A}{\frac{2000}{5}}$$

$$I_{sec} = 5.701 \angle -52.8°\ A$$

To satisfy the 115% margin in Options 15a and 16a:

Eq. (163) $$I_{\sec limit} > I_{sec} \times 115\%$$

$$I_{\sec limit} > 5.701 \angle -52.8°\ A \times 1.15$$

$$I_{\sec limit} > 6.56 \angle -52.8°\ A$$

Calculations at the remote end of the line from the plant.

Real Power output (P):

Eq. (164) $$P = GEN_{Synch\_nameplate} \times pf$$

$$P = 903\ MVA\ \times 0.85$$

$$P = 767.6\ MW$$

Reactive Power output (Q):

Eq. (165) $$Q = 120\% \times P$$

$$Q = 1.20 \times 767.6\ MW$$

$$Q = 921.12\ Mvar$$

Option 15a and 16a, Table 1 – Bus Voltage, calls for a 0.85 per unit of the line nominal voltage at the relay location, in this example the relay location is at the remote substation bus.

Eq. (166) $$V_{bus\_remote\_substation} = 0.85\ p.u. \times V_{nom}$$

$$V_{bus\_remote\_substation} = 0.85 \times 345\ kV$$

$$V_{bus\_remote\_substation} = 293.25\ kV$$

Example Calculations: Options 15a and 16a

Apparent power (S):

Eq. (167) $$S = P_{Synch\_reported} + jQ$$

$$S = 700.0\ MW + j921.12\ Mvar$$

$$S = 1157\angle 52.8°\ MVA$$

Primary current (I_{pri}):

Eq. (168) $$I_{pri} = \frac{S^*}{\sqrt{3} \times V_{bus\_remote\_substation}}$$

$$I_{pri} = \frac{1157\angle -52.8°\ MVA}{1.73 \times 293.25\ kV}$$

$$I_{pri} = 2280.6\angle -52.8°\ A$$

Secondary current (I_{sec}):

Eq. (169) $$I_{sec} = \frac{I_{pri}}{CT_{CT_{ratio\_remote\_bus}}}$$

$$I_{sec} = \frac{2280.6\angle -52.8°\ A}{\frac{2000}{5}}$$

$$I_{sec} = 5.701\ \angle -52.8°\ A$$

To satisfy the 115% margin in Options 15a and 16a:

Eq. (170) $$I_{\sec limit} > I_{sec} \times 115\%$$

$$I_{\sec limit} > 5.701\ \angle -52.8°\ A \times 1.15$$

$$I_{\sec limit} > 6.56\ \angle -52.8°\ A$$

Example Calculations: Options 15b and 16b

Options 15b and 16b represent the calculation for relays installed on the high-side of the GSU transformer, including relays installed at the remote end of the line, for Elements that connect a GSU transformer to the Transmission system that are used exclusively to export energy directly from a BES generating unit or generating plant connected to synchronous generation.

Option 15b represents applying a phase time overcurrent relay (e.g., 51) and/or phase instantaneous overcurrent supervisory elements (e.g., 50) associated with current-based, communication-assisted schemes where the scheme is capable of tripping for loss of communications installed on the high-side of the GSU transformer, including relays at the remote end of the line.

Option 16b represents applying a phase directional instantaneous overcurrent supervisory element (e.g., 67) associated with current-based, communication-assisted schemes where the scheme is capable of tripping for loss of communications directional toward the Transmission system and/or a phase directional time overcurrent relay (e.g., 67) directional toward the Transmission system installed on the high-side of the GSU, including relays at the remote end of the line.

Example calculations are provided for the case where relays are installed on the high-side of the GSU transformer, including relays installed on the remote end of line. Simulation is used to determine the line voltage at the relay location coincident with the highest Reactive Power output achieved during field-forcing in response to a 0.85 per unit of the line nominal voltage at the remote end of the line prior to field-forcing. This is achieved by modeling a shunt at the remote end (i.e., at the Transmission system) of the line during simulation.

The maximum Reactive Power flow and coincident voltage for both the high-side of the GSU transformer and remote end of the line are determined by simulation. The maximum Reactive Power output on the high-side of the GSU transformer and remote end of the line during field-forcing is used as these values will correspond to the lowest apparent impedance at the relay location. The corresponding simulated voltage is also used in the calculation. Note that although the excitation limiter reduces the field, the duration of the Reactive Power output achieved for this condition is sufficient to operate a phase overcurrent relay.

Example Calculations: Options 15b and 16b

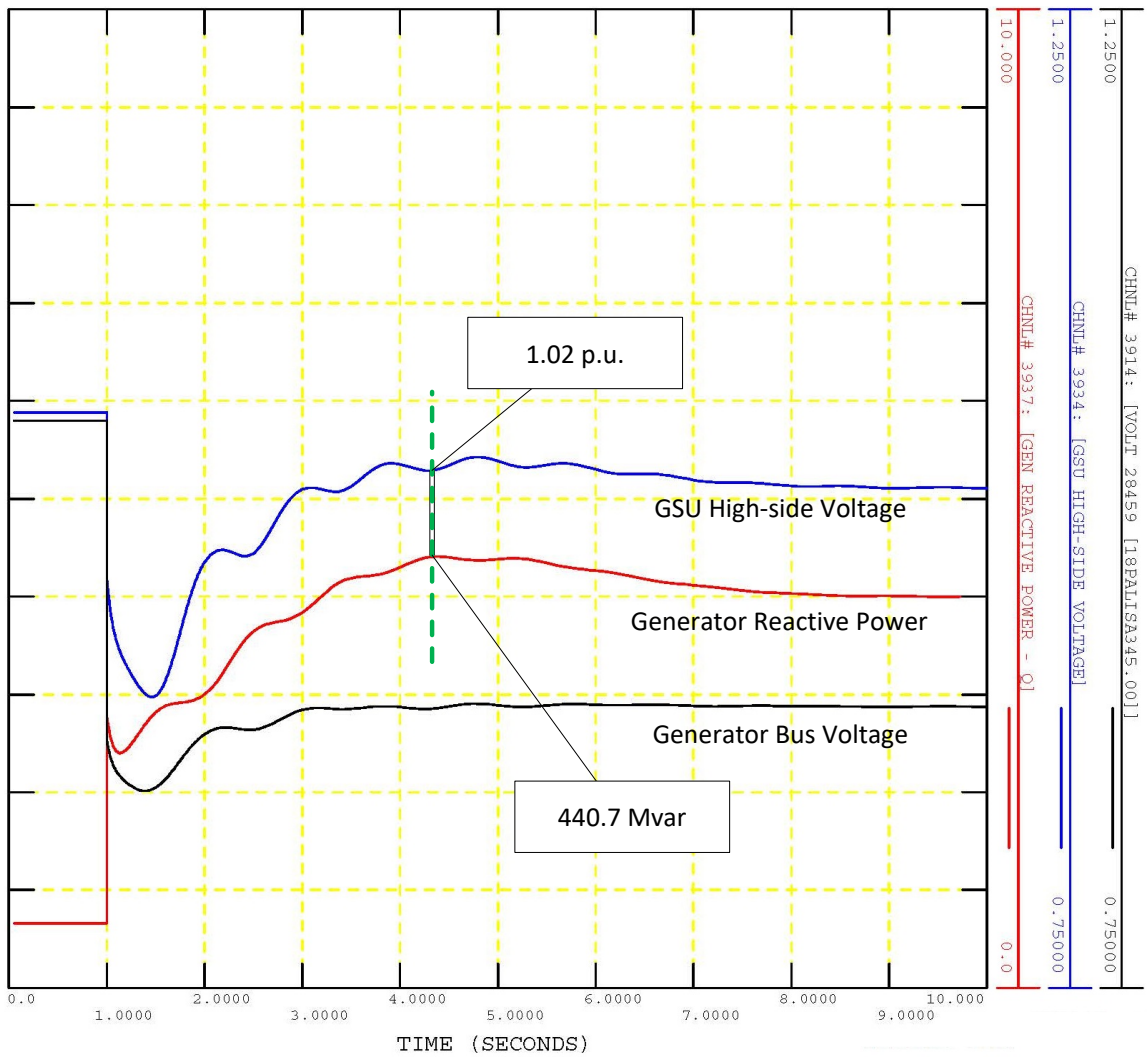

In this simulation the following values are derived:

$$Q = 440.7\ Mvar$$

$$V_{bus\_simulated} = 1.02 \times V_{nom} = 351.9\ kV$$

The other value required is the Real Power output which is modeled in the simulation at 100% of the gross MW capability reported to the Transmission Planner. In this case:

$$P_{reported} = 700.0\ MW$$

Apparent power (S):

Eq. (171) $S = P_{Synch\_reported} + jQ$

Example Calculations: Options 15b and 16b

$$S = 700.0\ MW + j440.7\ Mvar$$

$$S = 827.2\angle 32.2°\ MVA$$

Primary current (I_{pri}):

Eq. (172) $$I_{pri} = \frac{S^*}{\sqrt{3} \times V_{bus\_simulated}}$$

$$I_{pri} = \frac{827.2\angle -32.2°\ MVA}{1.73 \times 351.9\ kV}$$

$$I_{pri} = 1357.1\angle -32.2°\ A$$

Secondary current (I_{sec}):

Eq. (173) $$I_{sec} = \frac{I_{pri}}{CT_{ratio\_hv}}$$

$$I_{sec} = \frac{1357.1\angle -32.2°\ A}{\frac{2000}{5}}$$

$$I_{sec} = 3.39\ \angle -32.2°\ A$$

To satisfy the 115% margin in Options 15b and 16b:

Eq. (174) $$I_{\sec limit} > I_{sec} \times 115\%$$

$$I_{\sec limit} > 3.39\ \angle -32.2°\ A \times 1.15$$

$$I_{\sec limit} > 3.90\ \angle -32.2°\ A$$

Example Calculations: Option 17

Option 17 represents the calculation for relays installed on the high-side of the GSU transformer, including relays installed on the remote end of line, for Elements that connect a GSU transformer for three asynchronous generators to the Transmission system that are used exclusively to export energy directly from a BES generating unit or generating plant that is applying a phase distance relay (e.g., 21) directional toward the Transmission system. In this application it was assumed 20 Mvar of total static compensation was added.

Example Calculations: Option 17

Real Power output (P):

Eq. (175) $$P_{Asynch} = 3 \times GEN_{Asynch\_nameplate} \times pf$$

$$P_{Asynch} = 3 \times 40\ MVA\ \times 0.85$$

$$P_{Asynch} = 102.0\ MW$$

Reactive Power output (Q):

Eq. (176) $$Q_{Asynch} = MVAR_{static} + MVAR_{gen\_static} + \left(3 \times GEN_{Asynch\_nameplate} \times \sin(\cos^{-1}(pf))\right)$$

$$Q_{Asynch} = 15\ Mvar + 5\ Mvar + (3 \times 40\ MVA \times \sin(\cos^{-1}(0.85)))$$

$$Q_{Asynch} = 83.2\ Mvar$$

Option 17, Table 1 – Bus Voltage, calls for a 1.0 per unit of the line nominal voltage for the bus voltage (V_{bus}):

Eq. (177) $$V_{bus} = 1.0\ p.u. \times V_{nom}$$

$$V_{gen} = 1.0 \times 345\ kV$$

$$V_{gen} = 345.0\ kV$$

Apparent power (S):

Eq. (178) $$S = P + jQ$$

$$S = 102.0\ MW + j83.2\ Mvar$$

$$S = 131.6\angle 39.2°\ MVA$$

Primary impedance (Z_{pri}):

Eq. (179) $$Z_{pri} = \frac{V_{bus}^2}{S^*}$$

$$Z_{pri} = \frac{(345.0\ kV)^2}{131.6\angle -39.2°\ MVA}$$

$$Z_{pri} = 904.4\angle 39.2°\ \Omega$$

Example Calculations: Option 17

Secondary impedance (Z_{sec}):

Eq. (180) $$Z_{sec} = Z_{pri} \times \frac{CT_{Asynch\_ratio\_hv}}{PT_{ratio\_hv}}$$

$$Z_{sec} = 904.4\angle 39.2°\ \Omega \times \frac{\frac{300}{5}}{\frac{2000}{1}}$$

$$Z_{sec} = 904.4\angle 39.2°\ \Omega \times 0.03$$

$$Z_{sec} = 27.13\angle 39.2°\ \Omega$$

To satisfy the 130% margin in Option 17:

Eq. (181) $$Z_{\sec limit} = \frac{Z_{sec}}{130\%}$$

$$Z_{\sec limit} = \frac{27.13\angle 39.2°\ \Omega}{1.30}$$

$$Z_{\sec limit} = 20.869\angle 39.2°\ \Omega$$

$$\theta_{transient\ load\ angle} = 39.2°$$

Assume a Mho distance impedance relay with a maximum torque angle (MTA) set at 85°, and then the maximum allowable impedance reach is:

Eq. (182) $$Z_{max} < \frac{|Z_{\sec limit}|}{\cos\left(\theta_{MTA} - \theta_{transient\ load\ angle}\right)}$$

$$Z_{max} < \frac{20.869\ \Omega}{\cos(85.0° - 39.2°)}$$

$$Z_{max} < \frac{20.869\ \Omega}{0.697}$$

$$Z_{max} < 29.941\angle 85.0°\ \Omega$$

Example Calculations: Options 18 and 19

Option 18 represents the calculation for relays on relays installed on the high-side of the GSU transformer, including relays installed on the remote end of line, for Elements that connect a

Example Calculations: Options 18 and 19

GSU transformer for three asynchronous generators to the Transmission system that are used exclusively to export energy directly from a BES generating unit or generating plant.

Option 18 represents applying a phase time overcurrent (e.g., 51) and/or phase instantaneous overcurrent supervisory elements (e.g., 50) associated with current-based, communication-assisted schemes where the scheme is capable of tripping for loss of communications installed on the high-side of the GSU transformer, including relays at the remote end of the line.

Similarly, Option 19 may also be applied here for the phase directional overcurrent relays (e.g., 67) directional toward the Transmission system for Elements that connect a GSU transformer, including relays at the remote end of the line to the Transmission system that are used exclusively to export energy directly from a BES generating unit or generating plant. In this application it was assumed 20 Mvar of total static compensation was added.

Real Power output (P):

Eq. (183) $$P = 3 \times GEN_{Asych\_nameplate} \times pf$$

$$P = 3 \times 40\ MVA \times 0.85$$

$$P = 102.0\ MW$$

Reactive Power output (Q):

Eq. (184) $$Q = MVAR_{static} + MVAR_{gen\_static} + \left(3 \times GEN_{Asynch\_nameplate} \times \sin(\cos^{-1}(pf))\right)$$

$$Q = 15\ Mvar + 5\ Mvar + (3 \times 40\ MVA \times \sin(\cos^{-1}(0.85)))$$

$$Q = 83.2\ Mvar$$

Options 18 and 19, Table 1 – Bus Voltage, calls for a 1.0 per unit of the line nominal voltage (V_{bus}):

Eq. (185) $$V_{nom} = 1.0\ p.u. \times V_{nom}$$

$$V_{bus} = 1.0 \times 345\ kV$$

$$V_{bus} = 345\ kV$$

Apparent power (S):

Eq. (186) $$S = P + jQ$$

$$S = 102.0\ MW + j83.2\ Mvar$$

Example Calculations: Options 18 and 19

$$S = 131.6\angle 39.2°\ MVA$$

Primary current (I_{pri}):

Eq. (187) $$I_{pri} = \frac{S^*}{\sqrt{3} \times V_{bus}}$$

$$I_{pri} = \frac{131.6\angle -39.2°\ MVA}{1.73 \times 345\ kV}$$

$$I_{pri} = 220.5\ \angle -39.2° A$$

Secondary current (I_{sec}):

Eq. (188) $$I_{sec} = \frac{I_{pri}}{CT_{Asynch\_ratio\_hv}}$$

$$I_{sec} = \frac{220.5\angle -39.2°\ A}{\frac{300}{5}}$$

$$I_{sec} = 3.675\angle -39.2°\ A$$

To satisfy the 130% margin in Options 18 and 19:

Eq. (189) $$I_{\sec limit} > I_{sec} \times 130\%$$

$$I_{\sec limit} > 3.675\angle -39.2°\ A \times 1.30$$

$$I_{\sec limit} > 4.778\angle -39.2°\ A$$

End of calculations

Rationale

During development of this standard, text boxes were embedded within the standard to explain the rationale for various parts of the standard. Upon BOT approval, the text from the rationale text boxes was moved to this section.

Rationale for R1

Requirement R1 is a risk-based requirement that requires the responsible entity to be aware of each protective relay subject to the standard and applies an appropriate setting based on its calculations or simulation for the conditions established in Attachment 1.

The criteria established in Attachment 1 represent short-duration conditions during which generation Facilities are capable of providing system reactive resources, and for which generation Facilities have been historically recorded to disconnect, causing events to become more severe.

The term, “while maintaining reliable fault protection” in Requirement R1 describes that the responsible entity is to comply with this standard while achieving their desired protection goals. Refer to the Guidelines and Technical Basis, Introduction, for more information.

A. Introduction

1. **Title:** **Coordination of Protection Systems for Performance During Faults**

2. **Number:** PRC-027-1

3. **Purpose:** To maintain the coordination of Protection Systems installed to detect and isolate Faults on Bulk Electric System (BES) Elements, such that those Protection Systems operate in the intended sequence during Faults.

4. **Applicability:**

   4.1. Functional Entities:

   4.1.1. Transmission Owner

   4.1.2. Generator Owner

   4.1.3. Distribution Provider (that owns Protection Systems identified in the Facilities section 4.2 below)

   4.2. Facilities: Protection Systems installed to detect and isolate Faults on BES Elements.

5. **Effective Date*:** See the Implementation Plan for PRC-027-1, Project 2007-06 System Protection Coordination.

B. Requirements and Measures

R1. Each Transmission Owner, Generator Owner, and Distribution Provider shall establish a process for developing new and revised Protection System settings for BES Elements, such that the Protection Systems operate in the intended sequence during Faults. The process shall include: *[Violation Risk Factor: Medium] [Time Horizon: Long-term Planning]*

1.1. A review and update of short-circuit model data for the BES Elements under study.

1.2. A review of the developed Protection System settings.

1.3. For Protection System settings applied on BES Elements that electrically join Facilities owned by separate functional entities (Transmission Owners, Generator Owners, and Distribution Providers), provisions to:

1.3.1. Provide the proposed Protection System settings to the owner(s) of the electrically joined Facilities.

1.3.2. Respond to any owner(s) that provided its proposed Protection System settings pursuant to Requirement R1, Part 1.3.1 by identifying any coordination issue(s) or affirming that no coordination issue(s) were identified.

1.3.3. Verify that identified coordination issue(s) associated with the proposed Protection System settings for the associated BES Elements are addressed prior to implementation.

1.3.4. Communicate with the other owner(s) of the electrically joined Facilities regarding revised Protection System settings resulting from unforeseen circumstances that arise during implementation or commissioning, Misoperation investigations, maintenance activities, or emergency replacements required as a result of Protection System component failure.

M1. Acceptable evidence may include, but is not limited to, dated electronic or hard copy documentation to demonstrate that the responsible entity established a process to develop settings for its Protection Systems, in accordance with Requirement R1.

R2. Each Transmission Owner, Generator Owner, and Distribution Provider shall, for each BES Element with Protection System functions identified in Attachment A: *[Violation Risk Factor: Medium] [Time Horizon: Long-term Planning]*

- Option 1: Perform a Protection System Coordination Study in a time interval not to exceed six-calendar years; or
- Option 2: Compare present Fault current values to an established Fault current baseline and perform a Protection System Coordination Study when the comparison identifies a 15 percent or greater deviation in Fault current values (either three phase or phase to ground) at a bus to which the BES Element is connected, all in a time interval not to exceed six-calendar years;[1] or,
- Option 3: Use a combination of the above.

M2. Acceptable evidence may include, but is not limited to, dated electronic or hard copy documentation to demonstrate that the responsible entity performed Protection System Coordination Study(ies) and/or Fault current comparisons in accordance with Requirement R2.

R3. Each Transmission Owner, Generator Owner, and Distribution Provider shall utilize its process established in Requirement R1 to develop new and revised Protection System settings for BES Elements. *[Violation Risk Factor: High] [Time Horizon: Operations Planning]*

[1] The initial Fault current baseline(s) shall be established by the effective date of this Reliability Standard and updated each time a Protection System Coordination Study is performed. The Fault current baseline for BES generating resources may be established at the generator, the generator step-up (GSU) transformer(s), or at the common point of connection at 100 kV or above. For dispersed power producing resources, the Fault current baseline may also be established at the BES aggregation point (total capacity greater than 75 MVA). If an initial baseline was not established by the effective date of this Reliability Standard because of the previous use of an alternate option or the installation of a new BES Element, the entity may establish the baseline by performing a Protection System Coordination Study.

M3. Acceptable evidence may include, but is not limited to, dated electronic or hard copy documentation to demonstrate that the responsible entity utilized its settings development process established in Requirement R1, as specified in Requirement R3.

C. Compliance

1. Compliance Monitoring Process

1.1. Compliance Enforcement Authority:
The British Columbia Utilities Commission.

1.2. Evidence Retention:
The following evidence retention period(s) identify the period of time an entity is required to retain specific evidence to demonstrate compliance. For instances where the evidence retention period specified below is shorter than the time since the last audit, the Compliance Enforcement Authority may ask an entity to provide other evidence to show that it was compliant for the full time period since the last audit.

The applicable entity shall keep data or evidence to show compliance, as identified below, unless directed by its Compliance Enforcement Authority to retain specific evidence for a longer period of time as part of an investigation.

The Transmission Owner, Generator Owner, and Distribution Provider shall each keep data or evidence to show compliance with Requirements R1, R2, and R3, and Measures M1, M2, and M3 since the last audit, unless directed by its Compliance Enforcement Authority to retain specific evidence for a longer period of time as part of an investigation.

If a Transmission Owner, Generator Owner, or Distribution Provider is found non-compliant, it shall keep information related to the non-compliance until mitigation is completed and approved, or for the time specified above, whichever is longer.

The Compliance Enforcement Authority shall keep the last audit records and all requested and submitted subsequent audit records.

1.3. Compliance Monitoring and Enforcement Program
As defined in the NERC Rules of Procedure, “Compliance Monitoring and Enforcement Program” refers to the identification of the processes that will be used to evaluate data or information for the purpose of assessing performance or outcomes with the associated Reliability Standard.

Violation Severity Levels

R #	Violation Severity Levels			
	Lower VSL	Moderate VSL	High VSL	Severe VSL
R1.	N/A	The responsible entity established a process in accordance with Requirement R1, but failed to include Requirement R1, Part 1.1 or Part 1.2.	The responsible entity established a process in accordance with Requirement R1, but failed to include Requirement R1, Part 1.1 and Part 1.2.	The responsible entity established a process in accordance with Requirement R1, but failed to include Requirement R1, Part 1.3. OR The responsible entity failed to establish any process in accordance with Requirement R1.
R2.	The responsible entity performed a Protection System Coordination Study for each BES Element, in accordance with Requirement R2, Option 1, Option 2, or Option 3 but was late by less than or equal to 30 calendar days.	The responsible entity performed a Protection System Coordination Study for each BES Element, in accordance with Requirement R2, Option 1, Option 2, or Option 3, but was late by more than 30 calendar days but less than or equal to 60 calendar days.	The responsible entity performed a Protection System Coordination Study for each BES Element, in accordance with Requirement R2, Option 1, Option 2, or Option 3, but was late by more than 60 calendar days but less than or equal to 90 calendar days.	The responsible entity performed a Protection System Coordination Study for each BES Element, in accordance with Requirement R2, Option 1, Option 2, or Option 3, but was late by more than 90 calendar days. OR The responsible entity failed to perform Option 1, Option 2, or Option 3, in accordance

				with Requirement R2.
R3.	N/A	N/A	N/A	The responsible entity failed to utilize the process established in accordance with Requirement R1.

D. Regional Variances

None.

E. Associated Documents

NERC System Protection and Control Subcommittee – "Power Plant and Transmission System Protection Coordination."

NERC System Protection and Control Task Force, December 7, 2006, "Assessment of Standard PRC-001-0 – System Protection Coordination."

NERC System Protection and Control Task Force, September 2006, "The Complexity of Protecting Three-Terminal Transmission Lines."

Version History

Version	Date	Action	Change Tracking
1	November 5, 2015	Adopted by NERC Board of Trustees	New standard developed under Project 2007-06.
1	June 7, 2018	FERC Order issued approving PRC-027-1. Docket No. RM16-22-000.	

Attachment A

The following Protection System functions[2] are applicable to Requirement R2 if: (1) available Fault current levels are used to develop the settings for those Protection System functions; and (2) those Protection System functions require coordination with other Protection Systems.

21 – Distance if:

- infeed is used in determining reach (phase and ground distance), or
- zero-sequence mutual coupling is used in determining reach (ground distance).

50 – Instantaneous overcurrent

51 – AC inverse time overcurrent

67 – AC directional overcurrent if used in a non-communication-aided protection scheme

Notes:

1. The above Protection System functions utilize current in their measurement to initiate tripping of circuit breakers. Changes in the magnitude of available Fault current can impact the coordination of these functions.
2. See the PRC-027-1 Supplemental Material section for additional information.

[2] ANSI/IEEE Standard C37.2 *Standard for Electrical Power System Device Function Numbers, Acronyms, and Contact Designations*.

Purpose

The Purpose states: To maintain the coordination of Protection Systems installed to detect and isolate Faults on Bulk Electric System (BES) Elements, such that those Protection Systems operate in the intended sequence during Faults.

Coordinated Protection Systems enhance reliability by isolating faulted equipment, reducing the risk of BES instability or Cascading, and leaving the remainder of the BES operational and more capable of withstanding the next Contingency. When Faults occur, properly coordinated Protection Systems minimize the number of BES Elements that are removed from service and protect equipment from damage. This standard requires that entities establish and implement a process to coordinate their Protection Systems to operate in the intended sequence during Faults.

Applicability

Transmission Owners, Generator Owners, and Distribution Providers are included in the Applicability of PRC-027-1 because they may own Protection Systems that are installed for the purpose of detecting Faults on the Bulk Electric System (BES). It is only those Protection Systems that are under the purview of this standard.

Transmission Owners are included in the Applicability of PRC-027-1 because they own the largest number of Protection Systems installed for the purpose of detecting Faults on the BES.

Generator Owners have Protection Systems installed for the purpose of detecting Faults on the BES. It is important that those Protection Systems are coordinated with Protection Systems owned by Transmission Owners to ensure that generation Facilities do not become disconnected from the BES unnecessarily. Functions such as impedance reaches, overcurrent pickups, and time delays need to be evaluated for coordination.

A Distribution Provider may provide an electrical interconnection and path to the BES for generators that will contribute current to Faults that occur on the BES. If the Distribution Provider owns Protection Systems that operate for those Faults, it is important that those Protection Systems are coordinated with other Protection Systems that can be impacted by the current contribution to the Fault of Distribution Provider.

After the Protection Systems of Distribution Providers and Generator Owners are shown to be coordinated with other Protection Systems on the BES, there will be little future impact on the entities unless there are significant changes at or near the bus that interconnects with the Transmission Owner. The Transmission Owner, which is typically the entity maintaining the system model for Fault studies, will provide the Fault current data upon request by the Distribution Provider or Generator Owner. The Distribution Provider and Generator Owner will determine whether a change in Fault current from the baseline has occurred such that a review of coordination is necessary.

Requirement R1

The requirement states: Each Transmission Owner, Generator Owner, and Distribution Provider shall establish a process for developing new and revised Protection System settings for BES Elements, such that the Protection Systems operate in the intended sequence during Faults.

The reliability objective of this requirement is to have applicable entities establish a process to develop settings for coordinating their Protection Systems, such that they operate in the intended sequence during Faults. The parts that are included as elements of the process ensure the development of accurate settings, as well as providing internal and external checks to minimize the possibility of errors that could be introduced in the development of settings.

This standard references various publications that discuss protective relaying theory and application. The description of "coordination of protection" is from the pending revision of IEEE Standard C37.113-1999 (Reaffirmed: 2004), *Guide for Protective Relay Applications to Transmission Lines*, which reads:

> *"The process of choosing current or voltage settings, or time delay characteristics of protective relays such that their operation occurs in a specified sequence so that interruption to customers is minimized and least number of power system elements are isolated following a system fault."*

Entities may have differing technical criteria for the development of Protection System settings based on their own philosophies. These philosophies can vary based on system topology, protection technology utilized, as well as historical knowledge; as such, a single definition or criterion for "Protection System coordination" is not practical.

The coordination of some Protection Systems may seem unnecessary, such as for a line that is protected solely by dual current differential relays. However, backup Protection Systems that are enabled to operate based on current or apparent impedance with some definite or inverse time delay must be coordinated with other Protection Systems of the BES Element such that tripping does not unnecessarily occur for Faults outside of the differential zone.

Part 1.1 A review and update of short-circuit model data for the BES Elements under study.

The short-circuit study provides the necessary Fault currents used by protection engineers to develop Protection System settings for Transmission Owners, Generator Owners, and Distribution Providers. Generator Owners and Distribution Providers may not have or maintain short-circuit models; consequently, these entities would obtain the short-circuit model data from the Transmission Planners, Planning Coordinators, or Transmission Owners. Including a review and, if necessary, an update of short-circuit study information is necessary to ensure that information accurately reflects the physical power system that will form the basis of the Protection System Coordination Study and development of Protection System relay settings. The results of a short-circuit study are only as accurate as the information that its calculations are based on.

A short-circuit study is an analysis of an electrical network that determines the magnitude of the currents flowing in the network during an electrical Fault. Because the results of short-circuit studies are used as the basis for protective device coordination studies, the short-circuit model should accurately reflect the physical power system.

Reviews could include:

1. A review of applicable BES line, transformer, and generator impedances and Fault currents.

2. A review of the network model to confirm the network in the study accurately reflects the configuration of the actual System, or how the System will be configured when the proposed relay settings are installed.
3. A review, where applicable, of interconnected Transmission Owner, Generator Owner, and Distribution Provider information.

Part 1.2 A review of the developed Protection System settings.

A review of the Protection System settings prior to implementation reduces the possibility of introducing human error. A review is any systematic process of verifying the developed settings meet the technical criteria of the entity. Examples of reviews include peer reviews, automated checking programs, and entity-developed review procedures.

Part 1.3 For Protection System settings applied on BES Elements that electrically join Facilities owned by separate functional entities (Transmission Owners, Generator Owners, and Distribution Providers), provisions to:

Requirement R1, Part 1.3 addresses the coordination of Protection System settings applied on BES Elements that electrically join Facilities owned by separate functional entities. Communication among these entities is essential so potential Protection System coordination issues can be identified and addressed prior to implementation of any proposed Protection System changes.

Part 1.3.1 1.3.1. Provide the proposed Protection System settings to the owners of the electrically joined Facilities.

Requirement R1, Part 1.3.1 requires the entity to include in its process a provision to provide proposed Protection System settings to other entities. This communication ensures that the other entities have the necessary information to review the settings and determine if there are any Protection System coordination issues.

Part 1.3.2 Respond to any owner(s) that provided its proposed Protection System settings pursuant to Requirement R1, Part 1.3.1 by identifying any coordination issue(s) or affirming that no coordination issue(s) were identified.

Requirement R1, Part 1.3.2 requires the entity receiving proposed Protection System settings to include in its process a provision to respond to the entity that initiated the proposed changes. This ensures that the proposed settings are reviewed and that the initiating entity receives a response indicating Protection System coordination issues were identified, or affirmation that no issues were identified.

Part 1.3.3 Verify that identified coordination issue(s) associated with the proposed Protection System settings for the associated BES Elements are addressed prior to implementation.

Requirement R1, Part 1.3.3 requires the entity to include in their process a provision to verify that any identified coordination issue(s) associated with the proposed Protection System settings are addressed prior to implementation. This ensures that any potential impact to BES reliability is minimized.

The exclusion in PRC-001-1.1(ii), Requirement R3, R3.1 for dispersed power producing resources applies only to interconnections between different functional entities. As such, the exclusion only maps to Requirement R1, Part 1.3 in PRC-027-1. Due to the design of dispersed generation sites, the Protection Systems applied on the individual dispersed generation resources are not electrically joined Facilities owned by separate functional entities as specified in Requirement R1, Part 1.3 nor are they connected by BES Elements. Therefore Requirement R1, Part 1.3 does not apply to the Protection Systems applied on the individual dispersed generation resources. Requirement R1, Part 1.3 applies only to the Protection Systems applied on the BES Elements that electrically join Facilities owned by separate functional entities.

Note: There could be instances where coordination issues are identified and the entities agree not to mitigate all of the issues based on engineering judgment. It is also recognized that coordination issues identified during a project may not be immediately resolved if the resolution involves additional system modifications not identified in the initial project scope. Further, there could be situations where protection philosophies differ between entities, but the entities can agree that these differences do not create coordination issues.

> **Part 1.3.4** Communicate with the other owner(s) of the electrically joined Facilities regarding revised Protection System settings resulting from unforeseen circumstances that arise during implementation or commissioning, Misoperation investigations, maintenance activities, or emergency replacements required as a result of Protection System component failure.

Requirement R1, Part 1.3.4 requires the entity to communicate revisions to Protection System settings that occur due to unforeseen circumstances and differ from those developed during the planning stages of projects.

Requirement R2

This requirement states: Each Transmission Owner, Generator Owner, and Distribution Provider shall, for each BES Element with Protection System functions identified in Attachment A:

- Option 1: Perform a Protection System Coordination Study in a time interval not to exceed six-calendar years; or
- Option 2: Compare present Fault current values to an established Fault current baseline and perform a Protection System Coordination Study when the comparison identifies a 15 percent or greater deviation in Fault current values (either three phase or phase to ground) at a bus to which the BES Element is connected, all in a time interval not to exceed six-calendar years;[3] or,

[3] The initial Fault current baseline(s) shall be established by the effective date of this Reliability Standard and updated each time a Protection System Coordination Study is performed. The Fault current baseline for BES generating resources may be established at the generator, the generator step-up (GSU) transformer(s), or at the common point of connection at 100 kV or above. For dispersed power producing resources, the Fault current baseline may also be established at the BES aggregation point (total capacity greater than 75 MVA). If an initial baseline was not established by the effective date of this Reliability Standard because of the previous use of an alternate option or the installation of a new BES Element, the entity may establish the baseline by performing a Protection System Coordination Study.

- Option 3: Use a combination of the above.

Over time, incremental changes in Fault current can accumulate enough to impact the coordination of Protection System functions affected by Fault current. To minimize this risk, Requirement R2 requires responsible entities to periodically (1) perform Protection System Coordination Studies and/or (2) review available Fault currents for those Protection System functions listed in Attachment A. Two triggers were established for initiating a review of existing Protection System settings to allow for industry flexibility.

In the first option, an entity may choose a time-based methodology to review Protection System settings, thus eliminating the necessity of establishing a Fault current baseline and periodically performing Fault current comparisons. This option provides the entity the flexibility to choose an interval of up to six-calendar years for performing the Protection System Coordination Studies for those Protection System functions in Attachment A. The six-calendar-year time interval was selected as a balance between the manpower required to perform the studies and the potential reliability impacts created by incremental changes of Fault current over time.

The second option allows the entity to periodically check for a 15 percent or greater deviation in Fault current (either three-phase or phase-to-ground) from an established Fault current baseline for Protection Systems at each bus to which a BES Element is connected. Fault current baseline values can be obtained from the short-circuit studies performed by the Transmission Planners, Planning Coordinators, or Transmission Owners. This option allows the entity to choose an interval of up to six-calendar years to perform the Fault current comparisons and Protection System Coordination Studies. The six-calendar-year time interval was selected as a balance between the manpower required to perform the studies and the potential reliability impacts created by incremental changes of Fault current over time.

The accumulation of these incremental changes could affect the performance of Protection Systems during Fault conditions. A maximum Fault current deviation of 15 percent (when compared to the entity-established baseline) was established based on generally-accepted margins for setting Protection Systems in which incremental Fault current changes would not interfere with coordination. The 15 percent maximum deviation provides an entity with latitude to choose a Fault current threshold that best matches its protection philosophy, or other business considerations. The Fault current based option requires an entity to first establish a Fault current baseline to be used as a point of reference for future Fault current studies. The Fault current values used in the percent change calculation, whether three-phase or phase-to-ground Fault currents, are typically determined with all generation in service and all transmission BES Elements in their normal operating state.

As described in the footnote for Requirement R2, Option 2, an entity that elects to initially use Option 2 must establish its baseline prior to the effective date of the standard. If an initial baseline was not established by the effective date of this Reliability Standard because of the previous use of an alternate option or the installation of a new BES Element, the entity may establish the baseline upon performing a Protection System Coordination Study. The Fault current baseline values can be updated or established when a Protection System Coordination Study is performed. The baseline values at each bus to which a BES Element is connected are updated whenever a new Protection System Coordination Study is performed for the subject

Protection System. The footnote also states that the Fault current baselines may be established for BES generating resources at the generator, the BES aggregation point for dispersed power producing resources, or at the common point of connection at 100 kV or above.

> **Example:** Prior to the effective date of PRC-027-1, an entity intending to use Option 2 of Requirement R2 establishes an initial baseline; e.g., 10,000 amps at the bus to which the BES Element under study is connected. A short-circuit review performed on March 1, 2024, for example, identifies that the Fault current has increased to 11,250 amps (12.5 percent deviation); consequently, no Protection System Coordination Study is required since the increase is below the maximum 15 percent deviation. The baseline value for the next comparison (to be performed no later than December 31, 2030) remains at 10,000 amps because no study was required as a result of the initial comparison. During the next six-year interval, Fault current comparison identifies that the Fault current has increased to 11,500 (15 percent deviation); therefore, a Protection System Coordination Study is required (and must also be completed no later than December 31, 2030), and a new baseline of 11,500 amps would be established.
>
> **Note:** In the first review described above, if the entity decides to perform a Protection System Coordination Study at the 12.5 percent deviation and the results of the study indicate that the settings still meet the setting criteria of the entity, then no settings changes are required and the baseline Fault current(s) would be updated.

As a third option, an entity has the flexibility to apply a combination of the two methodologies. For example, an entity may choose the periodic Protection System review (Option 1) and review its Facilities operated above 300 kV on a six-calendar-year interval, while choosing to use the Fault current comparison (Option 2) for its Facilities operated below 300 kV.

The Protection System functions listed in Attachment A utilize AC current in their measurement to initiate tripping of circuit breakers and the coordination of these functions is susceptible to changes in the magnitude of available short-circuit Fault current. These functions are included in Attachment A based on meeting the following criteria: (1) available Fault current levels are used to develop settings, and (2) the functions require coordination with other Protection Systems. Examples of functions not included in Attachment A because they do not meet both of the criteria are differential relays and Fault detectors. The numerical identifiers in Attachment A represent general device functions according to *ANSI/IEEE Standard C37.2 Standard for Electrical Power System Device Function Numbers, Acronyms, and Contact Designations*.

The following provide additional information regarding the Protection System functions in Attachment A.

A “51 – AC inverse time overcurrent” relay connected to a CT on the neutral of a generator step-up transformer, referred to as “51N – AC Inverse Time Earth Overcurrent Relay (Neutral CT Method)” in ANSI/IEEE Standard C37.2, would be included in a Protection System Coordination Study. Also applicable, are “51 – AC Inverse time overcurrent” relays connected to CTs on the phases of an autotransformer for through-fault protection. Overcurrent functions used in conjunction with other functions are to be reviewed as well. An example is a definite-time overcurrent function, which is a “50 – Instantaneous overcurrent” function used in conjunction with a “62 – Time-delay” function.

If the functions listed in Attachment A are used in conjunction with other functions, they would be included in a Protection System Coordination Study provided they require coordination with other Protection Systems. An example of this is a time-delayed "21 – Distance" function, which is a "21 – Distance" function with a "62 – Time-delay" function. Another example would be a definite-time overcurrent function, which is a "50 – Instantaneous overcurrent" function with a "62 – Time-delay" function. A "50 – Instantaneous overcurrent" function used for supervising a "21 – Distance" function would not be included in a Protection System Coordination Study as it does not require coordination with other Protection Systems.

Reviewing "21 – Distance" functions is limited to those applied for phase and ground distance where infeed is used in determining the phase or ground distance setting when zero-sequence mutual coupling is used in determining the setting. Where infeed is not used in determining the setting, "21 – Distance" functions would not be included in a Protection System Coordination Study, as the reach is not susceptible to changes in the magnitude of available short-circuit Fault current. Where infeed is used in determining the reach, coordination can be affected by changes in the magnitude of available short-circuit Fault current. Two examples where infeed may be used in determining the reach, are protection for a transmission line with a long tap and a three-terminal transmission line. Ground distance functions are influenced by zero-sequence mutual coupling. The ground distance measurement can appear to be greater than or less than the true distance to a Fault when there is zero-sequence mutual coupling. The influence of zero-sequence mutual coupling changes with the magnitude of available short-circuit current. Therefore, "21 – Distance" functions would be included in a Protection System Coordination Study, when zero-sequence mutual coupling is used in determining the setting.

The 67 – AC directional overcurrent function utilized in Protection Systems for Transmission lines can be instantaneous overcurrent, inverse time overcurrent, or both instantaneous overcurrent and inverse time overcurrent. For example, in a communication-aided directional comparison blocking (DCB) scheme, the instantaneous overcurrent function is set very sensitive. When a single line-to-ground Fault occurs on a Transmission line, the Fault is detected by a number of Protection Systems for other Transmission lines. Signals from communication equipment are transmitted and received to block the other Protection Systems for the non-faulted Transmission lines from operating, thereby providing the coordination. A 67 – AC directional overcurrent function used in a permissive overreaching transfer trip scheme (POTT) relies on a signal from the remote end to operate and, therefore, does not require coordination with other Protection Systems.

Instantaneous overcurrent and/or inverse time overcurrent for a 67 – AC directional overcurrent function are utilized in a non-communication-aided Protection System for Transmission lines. As communication is not used to prevent operation for Faults outside a Protection System's zone of protection, coordination is necessary with other Protection Systems for buses, transformers, and other Transmission lines. The instantaneous overcurrent function should be set to not overreach the end of the Transmission line. The inverse time overcurrent function should be set to coordinate with the inverse time overcurrent function of other Protection Systems. Changes in the magnitude of available Fault current can affect the coordination.

Requirement R3

The requirement states: Each Transmission Owner, Generator Owner, and Distribution Provider shall utilize its process established in Requirement R1 to develop new and revised Protection System settings for BES Elements.

The reliability objective of this requirement is for applicable entities to utilize the process established in Requirement R1. Utilizing each of the elements of the process ensures a consistent approach to the development of accurate Protection System settings, decreases the possibility of introducing errors, and increases the likelihood of maintaining a coordinated Protection System.

Rationale

During development of this standard, text boxes were embedded within the standard to explain the rationale for various parts of the standard. Upon BOT adoption, the text from the rationale text boxes will be moved to this section.

Rationale for Requirement R1:

Coordinated Protection Systems enhance reliability by isolating faulted equipment, thus reducing the risk of BES instability or Cascading, and leaving the remainder of the BES operational and more capable of withstanding the next Contingency. When Faults occur, properly coordinated Protection Systems minimize the number of BES Elements that are removed from service and protect equipment from damage. The stated purpose of this standard is: "To maintain the coordination of Protection Systems installed to detect and isolate Faults on Bulk Electric System (BES) Elements, such that those Protection Systems operate in the intended sequence during Faults." Requirement R1 captures this intent by requiring responsible entities establish a process that, when followed, allows for their Protection Systems to operate in the intended sequence during Faults. Requirement R1, Parts 1.1 through 1.3 are key elements to the process for developing Protection System settings.

Part 1.1 Reviewing and updating the short-circuit model data used to develop new or revised Protection System settings helps to assure that settings are developed using accurate, up-to-date information. Generator Owners and Distribution Providers may not have or maintain short-circuit models; consequently, these entities would obtain the short-circuit model data from the Transmission Planners, Planning Coordinators, or Transmission Owners.

Part 1.2 A review of the developed Protection System settings reduces the likelihood of introducing human error and verifies that the settings produced meet the technical criteria of the entity. Peer reviews, automated checking programs, and entity-developed review procedures are all examples of reviews.

Part 1.3 The coordination of Protection Systems associated with BES Elements that electrically join Facilities owned by separate functional entities (Transmission Owners, Generator Owners, and Distribution Providers) is essential to the reliability of the BES. Communication and review of proposed settings among these entities are necessary to identify potential coordination issues and address the issues prior to implementation of any proposed Protection System changes.

The exclusion in PRC-001-1.1(ii), Requirement R3, R3.1 for dispersed power producing resources applies only to interconnections between different functional entities. As such, the exclusion only maps to Requirement R1, Part 1.3 in PRC-027-1. Due to the design of dispersed generation sites, the Protection Systems applied on the individual dispersed generation resources are not electrically joined Facilities owned by separate functional entities as specified in Requirement R1, Part 1.3 nor are they connected by BES Elements. Therefore Requirement R1, Part 1.3 does not apply to the Protection Systems applied on the individual dispersed generation resources. Requirement R1, Part 1.3 applies only to the Protection Systems applied on the BES Elements that electrically join Facilities owned by separate functional entities.

Unforeseen circumstances could require immediate changes to Protection System settings. Requirement R1, Part 1.3.4 requires owners to include provisions to communicate those

unplanned settings changes after-the-fact to the other owner(s) of the electrically joined Facilities.

Note: In cases where a single protective relaying group performs coordination work for separate functional entities within an organization, the communication aspects of Requirement R1, Part 1.3 can be demonstrated by internal documentation.

Rationale for Requirement R2:
Over time, incremental changes in Fault current can accumulate enough to impact the coordination of Protection System functions affected by Fault current. To minimize this risk, Requirement R2 requires Transmission Owners, Generator Owners, and Distribution Providers to periodically (1) perform Protection System Coordination Studies and/or (2) review available Fault currents for those Protection System functions listed in Attachment A. The numerical identifiers in Attachment A represent general protective device functions per ANSI/IEEE *Standard C37.2 Standard for Electrical Power System Device Function Numbers, Acronyms, and Contact Designations*.

Requirement R2 provides entities with options to assess the state of their Protection System coordination.

Option 1 is a time-based methodology. The entity may choose to perform, at least once every six-calendar years, a Protection System Coordination Study for each of its Protection Systems identified in Attachment A. The six-calendar-year time interval was selected as a balance between the resources required to perform the studies and the potential reliability impacts created by incremental changes of Fault current over time.

Option 2 is a Fault current-based methodology. If Option 2 is initially selected, Fault current baseline(s) must be established prior to the effective date of this Reliability Standard. A baseline may be established when a new BES Element is installed or after a Protection System Coordination Study has been performed. The baseline(s) will be used as control point(s) for future Fault current comparisons. The Fault current baseline values can be obtained from the short-circuit studies performed by the Transmission Planners, Planning Coordinators, or Transmission Owners. In a time interval not to exceed six-calendar years following the effective date of this standard, an entity must perform a Fault current comparison. If the comparison identifies a deviation less than 15 percent, no further action is required for that six-year interval; however, if the comparison identifies a 15 percent or greater deviation in Fault current values (either three-phase or phase-to-ground) at each bus to which the BES Element is connected, the entity must also perform a Protection System Coordination Study during the same six-year interval. The baseline Fault current value(s) will be re-established whenever a new Protection System Coordination Study is performed. Fault current changes on the System not directly associated with BES modifications are usually small and occur gradually over time. The accumulation of these incremental changes could affect the performance of Protection System functions (identified in Attachment A of this standard) during Fault conditions. A Fault current deviation threshold of 15 percent or greater (as compared to the established baseline) and a maximum time interval of six calendar years were chosen for these evaluations. These parameters provide an entity with latitude to choose a Fault current threshold and time interval that best match its protection philosophy, Protection System maintenance schedule, or other

business considerations, without creating risk to reliability (See the Supplemental Material section for more detailed discussion).

The footnote in Option 2 describes how an entity may change from a time-based option to a Fault current-based option for existing BES Elements as well as establishing baselines for new BES Elements by performing Protection System Coordination Studies. The footnote also states that Fault current baselines for BES generating resources may be established at the generator, the generator step-up (GSU) transformer(s), or at the common point of connection at 100 kV or above. For dispersed power producing resources, the Fault current baseline may also be established at the BES aggregation point (total capacity greater than 75 MVA).

Option 3 provides the entity the choice of using both the time-based and Fault current-based methodologies. For example, the entity may choose to utilize the time-based methodology for Protection Systems at more critical Facilities and use the Fault current-based methodology for Protection Systems at other Facilities.

Rationale for Requirement R3:
Utilizing the processes established in Requirement R1 to develop new and revised Protection System settings provides a consistent approach to the development of Protection System settings and will minimize the potential for errors.

A. Introduction

1. **Title:** Voltage and Reactive Control

2. **Number:** VAR-001-5

3. **Purpose:** To ensure that voltage levels, reactive flows, and reactive resources are monitored, controlled, and maintained within limits in Real-time to protect equipment and the reliable operation of the Interconnection.

4. **Applicability:**

   4.1. Transmission Operators

   4.2. Generator Operators within the Western Interconnection (for the WECC Variance)

5. **Effective Date*:**

   5.1. The standard shall become effective on the first day of the first calendar quarter after the date that the standard is approved by an applicable governmental authority or as otherwise provided for in a jurisdiction where approval by an applicable governmental authority is required for a standard to go into effect. Where approval by an applicable governmental authority is not required, the standard shall become effective on the first day of the first calendar quarter after the date the standard is adopted by the NERC Board of Trustees or as otherwise provided for in that jurisdiction.

B. Requirements and Measures

R1. Each Transmission Operator shall specify a system voltage schedule (which is either a range or a target value with an associated tolerance band) as part of its plan to operate within System Operating Limits and Interconnection Reliability Operating Limits. *[Violation Risk Factor: High] [Time Horizon: Operations Planning]*

1.1. Each Transmission Operator shall provide a copy of the voltage schedules (which is either a range or a target value with an associated tolerance band) to its Reliability Coordinator and adjacent Transmission Operators within 30 calendar days of a request.

M1. The Transmission Operator shall have evidence that it specified system voltage schedules using either a range or a target value with an associated tolerance band.

For part 1.1, the Transmission Operator shall have evidence that the voltage schedules (which is either a range or a target value with an associated tolerance band) were provided to its Reliability Coordinator and adjacent Transmission Operators within 30 calendar days of a request. Evidence may include, but is not limited to, emails, website postings, and meeting minutes.

R2. Each Transmission Operator shall schedule sufficient reactive resources to regulate voltage levels under normal and Contingency conditions. Transmission Operators can provide sufficient reactive resources through various means including, but not limited to, reactive generation scheduling, transmission line and reactive resource switching, and using controllable load. *[Violation Risk Factor: High] [Time Horizon: Real-time Operations, Same-day Operations, and Operations Planning]*

M2. Each Transmission Operator shall have evidence of scheduling sufficient reactive resources based on their assessments of the system. For the operations planning time horizon, Transmission Operators shall have evidence of assessments used as the basis for how resources were scheduled.

R3. Each Transmission Operator shall operate or direct the Real-time operation of devices to regulate transmission voltage and reactive flow as necessary. *[Violation Risk Factor: High] [Time Horizon: Real-time Operations, Same-day Operations, and Operations Planning]*

M3. Each Transmission Operator shall have evidence that actions were taken to operate capacitive and inductive resources as necessary in Real-time. This may include, but is not limited to, instructions to Generator Operators to: 1) provide additional voltage support; 2) bring resources on-line; or 3) make manual adjustments.

R4. Each Transmission Operator shall specify the criteria that will exempt generators: 1) from following a voltage or Reactive Power schedule, 2) from having its automatic voltage regulator (AVR) in service or from being in voltage control mode, or 3) from having to make any associated notifications. *[Violation Risk Factor: Lower] [Time Horizon: Operations Planning]*

4.1 If a Transmission Operator determines that a generator has satisfied the exemption criteria, it shall notify the associated Generator Operator.

M4. Each Transmission Operator shall have evidence of the documented criteria for generator exemptions.

For part 4.1, the Transmission Operator shall also have evidence to show that, for each generator in its area that is exempt: 1) from following a voltage or Reactive Power schedule, 2) from having its automatic voltage regulator (AVR) in service or from being in voltage control mode, or 3) from having to make any notifications, the associated Generator Operator was notified of this exemption.

R5. Each Transmission Operator shall specify a voltage or Reactive Power schedule (which is either a range or a target value with an associated tolerance band) at either the high voltage side or low voltage side of the generator step-up transformer at the Transmission Operator's discretion. *[Violation Risk Factor: Medium] [Time Horizon: Operations Planning]*

5.1. The Transmission Operator shall provide the voltage or Reactive Power schedule (which is either a range or a target value with an associated tolerance band) to the associated Generator Operator and direct the Generator Operator to comply with the schedule in automatic voltage control mode (the AVR is in service and controlling voltage).

5.2. The Transmission Operator shall provide the Generator Operator with the notification requirements for deviations from the voltage or Reactive Power schedule (which is either a range or a target value with an associated tolerance band).

5.3. The Transmission Operator shall provide the criteria used to develop voltage schedules or Reactive Power schedule (which is either a range or a target value with an associated tolerance band) to the Generator Operator within 30 days of receiving a request.

M5. The Transmission Operator shall have evidence of a documented voltage or Reactive Power schedule (which is either a range or a target value with an associated tolerance band).

For part 5.1, the Transmission Operator shall have evidence it provided a voltage or Reactive Power schedule (which is either a range or a target value with an associated tolerance band) to the applicable Generator Operators, and that the Generator Operator was directed to comply with the schedule in automatic voltage control mode, unless exempted.

For part 5.2, the Transmission Operator shall have evidence it provided notification requirements for deviations from the voltage or Reactive Power schedule (which is either a range or a target value with an associated tolerance band). For part 5.3, the Transmission Operator shall have evidence it provided the criteria used to develop voltage schedules or Reactive Power schedule (which is either a range or a target

value with an associated tolerance band) within 30 days of receiving a request by a Generator Operator.

R6. After consultation with the Generator Owner regarding necessary step-up transformer tap changes and the implementation schedule, the Transmission Operator shall provide documentation to the Generator Owner specifying the required tap changes, a timeframe for making the changes, and technical justification for these changes. *[Violation Risk Factor: Lower] [Time Horizon: Operations Planning]*

M6. The Transmission Operator shall have evidence that it provided documentation to the Generator Owner when a change was needed to a generating unit's step-up transformer tap in accordance with the requirement and that it consulted with the Generator Owner.

C. Compliance

1. Compliance Monitoring Process:

1.1. Compliance Enforcement Authority:

The British Columbia Utilities Commission.

1.2. Evidence Retention:

The following evidence retention periods identify the period of time a registered entity is required to retain specific evidence to demonstrate compliance. For instances in which the evidence retention period specified below is shorter than the time since the last audit, the Compliance Enforcement Authority may ask the registered entity to provide other evidence to show that it was compliant for the full time period since the last audit.

The Transmission Operator shall retain evidence for Measures M1 through M6 for 12 months. The Compliance Monitor shall retain any audit data for three years.

1.3. Compliance Monitoring and Assessment Processes:

"Compliance Monitoring and Assessment Processes" refers to the identification of the processes that will be used to evaluate data or information for the purpose of assessing performance or outcomes with the associated reliability standard.

1.4. Additional Compliance Information:

None

Table of Compliance Elements

R #	Time Horizon	VRF	Violation Severity Levels			
			Lower VSL	Moderate VSL	High VSL	Severe VSL
R1	**Operations Planning**	**High**	N/A	N/A	N/A	The Transmission Operator does not specify a system voltage schedule (which is either a range or a target value with an associated tolerance band).
R2	**Real-time Operations, Same-day Operations, and Operations Planning**	**High**	N/A	N/A	The Transmission Operator does not schedule sufficient reactive resources as necessary to avoid violating an SOL.	The Transmission Operator does not schedule sufficient reactive resources as necessary to avoid violating an IROL.
R3	**Real-time Operations, Same-day Operations, and Operations Planning**	**High**	N/A	N/A	The Transmission Operator does not operate or direct any real-time operation of devices as necessary to avoid violating an SOL.	The Transmission Operator does not operate or direct any real-time operation of devices as necessary to avoid violating an IROL.

R #	Time Horizon	VRF	Violation Severity Levels			
			Lower VSL	Moderate VSL	High VSL	Severe VSL
R4	**Operations Planning**	**Lower**	N/A	N/A	The Transmission Operator has exemption criteria and notified the Generator Operator, but the Transmission Operator does not have evidence of the notification to the Generator Operator.	The Transmission Operator does not have exemption criteria.
R5	**Operations Planning**	**Medium**	N/A	The Transmission Operator does not provide the criteria for voltage or Reactive Power schedules (which is either a range or a target value with an associated tolerance band) after 30 days of a request.	The Transmission Operator does not provide voltage or Reactive Power schedules (which is either a range or a target value with an associated tolerance band) to all Generator Operators.	The Transmission Operator does not provide voltage or Reactive Power schedules (which is either a range or a target value with an associated tolerance band) to any Generator Operators. Or The Transmission Operator does not provide the Generator Operator with the notification

R #	Time Horizon	VRF	Violation Severity Levels			
			Lower VSL	Moderate VSL	High VSL	Severe VSL
						requirements for deviations from the voltage or Reactive Power schedule (which is either a range or a target value with an associated tolerance band).
R6	**Operations Planning**	**Lower**	The Transmission Operator does not provide either the technical justification or timeframe for changing generator step-up tap settings.	N/A	N/A	The Transmission Operator does not provide the technical justification and the timeframe for changing generator step-up tap settings.

D. Regional Variances

The following Interconnection-wide variance shall be applicable in the Western Electricity Coordinating Council (WECC) and replaces, in their entirety, Requirements R4 and R5. Please note that Requirement R4 is deleted and R5 is replaced with the following requirements.

Requirements and Measures

E.A.13 Each Transmission Operator shall issue any one of the following types of voltage schedules to the Generator Operators for each of their generation resources that are on-line and part of the Bulk Electric System within the Transmission Operator Area: *[Violation Risk Factor: Medium] [Time Horizon: Operations Planning and Same-day Operations]*

- A voltage set point with a voltage tolerance band and a specified period.
- An initial volt-ampere reactive output or initial power factor output with a voltage tolerance band for a specified period that the Generator Operator uses to establish a generator bus voltage set point.
- A voltage band for a specified period.

M.E.A.13 Each Transmission Operator will have evidence that it provided the voltage schedules to the Generator Operator, as required in E.A.13. Evidence may include, but is not limited to, dated spreadsheets, reports, voice recordings, or other documentation containing the voltage schedule including set points, tolerance bands, and specified periods as required in Requirement E.A.13.

E.A.14 Each Transmission Operator shall provide one of the following voltage schedule reference points for each generation resource in its area to the Generator Operator. *[Violation Risk Factor: Medium] [Time Horizon: Operations Planning and Same-day Operations]*

- The generator terminals.
- The high side of the generator step-up transformer.
- The point of interconnection.
- A location designated by mutual agreement between the Transmission Operator and Generator Operator.

M.E.A.14 The Transmission Operator will have evidence that it provided one of the voltage schedule reference points for each generation resource in its area to the Generator Operator, as required in E.A.14. Evidence may include, but is not limited to dated letters, e-mail, or other documentation that contains notification to the Generator Operator of the voltage schedule reference point for each generation resource.

E.A.15 Each Generator Operator shall provide its voltage set point conversion methodology from the point in Requirement E.A.14 to the generator terminals

within 30 calendar days of request by its Transmission Operator. *[Violation Risk Factor: Lower] [Time Horizon: Operations Planning]*

M.E.A.15 The Generator Operator will have evidence that within 30 calendar days of request by its Transmission Operator it provided its voltage set point conversion methodology from the point in Requirement E.A.14 to the generator terminals, as required in E.A.15. Evidence may include, but is not limited to, dated reports, spreadsheets, or other documentation.

E.A.16 Each Transmission Operator shall provide to the Generator Operator, within 30 calendar days of a request for data by the Generator Operator, its transmission equipment data and operating data that supports development of the voltage set point conversion methodology. *[Violation Risk Factor: Lower] [Time Horizon: Operations Planning]*

M.E.A.16 The Transmission Operator will have evidence that within 30 calendar days of request by its Generator Operator it provided data to support development of the voltage set point conversion methodology, as required in E.A.16. Evidence may include, but is not limited to, dated reports, spreadsheets, or other documentation.

E.A.17 Each Generator Operator shall meet the following control loop specifications if the Generator Operator uses control loops external to the automatic voltage regulators (AVR) to manage Mvar loading: *[Violation Risk Factor: Medium] [Time Horizon: Real-time Operations]*

E.A.17.1 Each control loop's design incorporates the AVR's automatic voltage controlled response to voltage deviations during System Disturbances.

E.A.17.2. Each control loop is only used by mutual agreement between the Generator Operator and the Transmission Operator affected by the control loop.

M.E.A.17 If the Generator Operator uses outside control loops to manage Mvar loading, the Generator Operator will have evidence that it met the control loop specifications in sub-parts E.A.17.1 through E.A.17.2, as required in E.A.17 and its sub-parts. Evidence may include, but is not limited to, design specifications with identified agreed-upon control loops, system reports, or other dated documentation.

Violation Severity Levels

E #	Lower VSL	Moderate VSL	High VSL	Severe VSL
E.A.13	For the specified period, the Transmission Operator did not issue one of the voltage schedules listed in E.A.13 to at least one generation resource but less than or equal to 5% of the generation resources that are on-line and part of the BES in the Transmission Operator Area.	For the specified period, the Transmission Operator did not issue one of the voltage schedules listed in E.A.13 to more than 5% but less than or equal to 10% of the generation resources that are on-line and part of the BES in the Transmission Operator Area.	For the specified period, the Transmission Operator did not issue one of the voltage schedules listed in E.A.13 to more than 10% but less than or equal to 15% of the generation resources that are on-line and part of the BES in the Transmission Operator Area.	For the specified period, the Transmission Operator did not issue one of the voltage schedules listed in E.A.13 to more than 15% of the generation resources that are on-line and part of the BES in the Transmission Operator Area.
E.A.14	The Transmission Operator did not provide a voltage schedule reference point for at least one but less than or equal to 5% of the generation resources in the Transmission Operator area.	The Transmission Operator did not provide a voltage schedule reference point for more than 5% but less than or equal to 10% of the generation resources in the Transmission Operator Area.	The Transmission Operator did not a voltage schedule reference point for more than 10% but less than or equal to 15% of the generation resources in the Transmission Operator Area.	The Transmission Operator did not provide a voltage schedule reference point for more than 15% of the generation resources in the Transmission Operator Area.

E #	Lower VSL	Moderate VSL	High VSL	Severe VSL
E.A.15	The Generator Operator provided its voltage set point conversion methodology greater than 30 days but less than or equal to 60 days of a request by the Transmission Operator.	The Generator Operator provided its voltage set point conversion methodology greater than 60 days but less than or equal to 90 days of a request by the Transmission Operator.	The Generator Operator provided its voltage set point conversion methodology greater than 90 days but less than or equal to 120 days of a request by the Transmission Operator.	The Generator Operator did not provide its voltage set point conversion methodology within 120 days of a request by the Transmission Operator.
E.A.16	The Transmission Operator provided its data to support development of the voltage set point conversion methodology than 30 days but less than or equal to 60 days of a request by the Generator Operator.	The Transmission Operator provided its data to support development of the voltage set point conversion methodology greater than 60 days but less than or equal to 90 days of a request by the Generator. Operator.	The Transmission Operator provided its data to support development of the voltage set point conversion methodology greater than 90 days but less than or equal to 120 days of a request by the Generator. Operator.	The Transmission Operator did not provide its data to support development of the voltage set point conversion methodology within 120 days of a request by the Generator Operator.
E.A.17	N/A	The Generator Operator did not meet the control loop specifications in E.A.17.2 when the Generator Operator uses control loop external to the AVR to manage Mvar loading.	The Generator Operator did not meet the control loop specifications in E.A.17.1 when the Generator Operator uses control loop external to the AVR to manage Mvar loading.	The Generator Operator did not meet the control loop specifications in E.A.17.1 through E.A.17.2 when the Generator Operator uses control loop external to the AVR to manage Mvar loading.

E. Interpretations

None

F. Associated Documents

None.

Version History

Version	Date	Action	Change Tracking
0	April 1, 2005	Effective Date	New
1	August 2, 2006	BOT Adoption	Revised
1	June 18, 2007	FERC approved Version 1 of the standard.	Revised
1	July 3, 2007	Added "Generator Owners" and "Generator Operators" to Applicability section.	Errata
1	August 23, 2007	Removed "Generator Owners" and "Generator Operators" to Applicability section.	Errata
2	August 5, 2010	Adopted by NERC Board of Trustees; Modified to address Order No. 693 Directives contained in paragraphs 1858 and 1879.	Revised
2	January 10, 2011	FERC issued letter order approving the addition of LSEs and Controllable Load to the standard.	Revised
3	May 9, 2012	Adopted by NERC Board of Trustees; Modified to add a WECC region variance	Revised
3	June 20, 2013	FERC issued order approving VAR-001-3	Revised
3	November 21, 2013	R5 and associated elements approved by FERC for retirement as part of the Paragraph 81 project (Project 2013-02)	Revised
4	February 6, 2014	Adopted by NERC Board of Trustees	Revised
4	August 1, 2014	FERC issued letter order issued approving VAR-001-4	
4.1	August 25, 2015	Added "or" to Requirement R5, 5.3 to read: schedules or Reactive Power	Errata
4.1	November 13, 2015	FERC Letter Order approved errata to VAR-001-4.1. Docket RD15-6-000	Errata
4.2	June 14, 2017	Project 2016-EPR-02 errata recommendations	Errata
4.2	August 10, 2017	Adopted by NERC Board of Trustees	Errata
4.2	September 26, 2017	FERC Letter Order issued approving VAR-001-4.2 Docket No. RD17-7-000.	
5	August 16, 2018	Adopted by NERC Board of Trustees	1) In E.A.14 "Area" was changed to

			"area."; 2) E.A.15 and associated elements were eliminated; 3) Measures were updated and relocated matching current conventions, replacing "shall" with "will"; 4) typographical errors in VSL Table for E.A.17 were corrected; 5) format was updated.
5	10/15/2018	FERC Order issued approving VAR-001-5 Docket No. RD18-8-000.	

Guidelines and Technical Basis

For technical basis for each requirement, please review the rationale provided for each requirement.

Rationale:

During development of this standard, text boxes were embedded within the standard to explain the rationale for various parts of the standard. Upon BOT approval, the text from the rationale text boxes was moved to this section.

Rationale for R1:

Paragraph 1868 of Order No. 693 requires NERC to add more "detailed and definitive requirements on “established limits” and “sufficient reactive resources”, and identify acceptable margins (i.e. voltage and/or reactive power margins)." Since Order No. 693 was issued, however, several FAC and TOP standards have become enforceable to add more requirements around voltage limits. More specifically, FAC-011 and FAC-014 require that System Operating Limits (SOLs) and reliability margins are established. The NERC Glossary definition of SOLs includes both: 1) voltage stability ratings (Applicable pre- and post-Contingency Voltage Stability) and 2*)* System Voltage Limits (Applicable pre- and post-Contingency voltage limits). Therefore, for reliability reasons Requirement R1 now requires a Transmission Operator (TOP) to set voltage or Reactive Power schedules with associated tolerance bands. Further, since neighboring areas can affect each other greatly, each TOP must also provide a copy of these schedules to its Reliability Coordinator (RC) and adjacent TOP upon request.

Rationale for R2:

Paragraph 1875 from Order No. 693 directed NERC to include requirements to run voltage stability analysis periodically, using online techniques where commercially available and offline tools when online tools are not available. This standard does not explicitly require the periodic voltage stability analysis because such analysis would be performed pursuant to the SOL methodology developed under the FAC standards. TOP standards also require the TOP to operate within SOLs and Interconnection Reliability Operating Limits (IROL). The VAR standard drafting team (SDT) and industry participants also concluded that the best models and tools are the ones that have been proven and the standard should not add a requirement for a responsible entity to purchase new online simulations tools. Thus, the VAR SDT simplified the requirements to ensuring sufficient reactive resources are online or scheduled. Controllable load is specifically included to answer FERC's directive in Order No. 693 at Paragraph 1879.

Rationale for R3:

Similar to Requirement R2, the VAR SDT determined that for reliability purposes, the TOP must ensure sufficient voltage support is provided in Real-time in order to operate within an SOL.

Rationale for R4:

The VAR SDT received significant feedback on instances when a TOP would need the flexibility for defining exemptions for generators. These exemptions can be tailored as the TOP deems necessary for the specific area's needs. The goal of this requirement is to provide a TOP the ability to exempt a Generator Operator (GOP) from: 1) a voltage or Reactive Power schedule, 2) a setting on the AVR, or 3) any VAR-002 notifications based on the TOP's criteria. Feedback from the industry detailed many system events that would require these types of exemptions which included, but are not limited to: 1) maintenance during shoulder months, 2) scenarios where two units are located within close proximity and both cannot be in voltage control mode, and 3) large system voltage swings where it would harm reliability if all GOP were to notify their respective TOP of deviations at one time. Also, in an effort to improve the requirement, the sub-requirements containing an exemption list were removed from the currently enforceable standard because this created more compliance issues with regard to how often the list would be updated and maintained.

Rationale for R5:

The new requirement provides transparency regarding the criteria used by the TOP to establish the voltage schedule. This requirement also provides a vehicle for the TOP to use appropriate granularity when setting notification requirements for deviation from the voltage or Reactive Power schedule. Additionally, this requirement provides clarity regarding a "tolerance band" as specified in the voltage schedule and the control dead-band in the generator's excitation system.

Voltage schedule tolerances are the bandwidth that accompanies the voltage target in a voltage schedule, should reflect the anticipated fluctuation in voltage at the Generation Operator's facility during normal operations, and be based on the TOP's assessment of N-1 and credible N-2 system contingencies. The voltage schedule's bandwidth should not be confused with the control dead-band that is programmed into a Generation Operator's automatic voltage regulator's control system, which should be adjusting the AVR prior to reaching either end of the voltage schedule's bandwidth.

Rationale for R6:

Although tap settings are first established prior to interconnection, this requirement could not be deleted because no other standard addresses when a tap setting must be adjusted. If the tap setting is not properly set, then the amount of VARs produced by a unit can be affected.